Ledex® Tubular Linear Solenoids

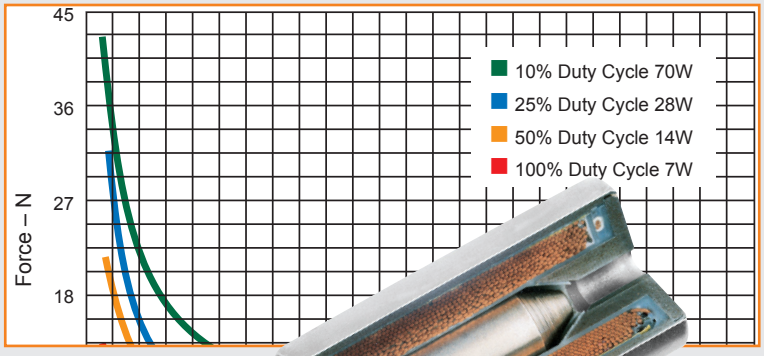

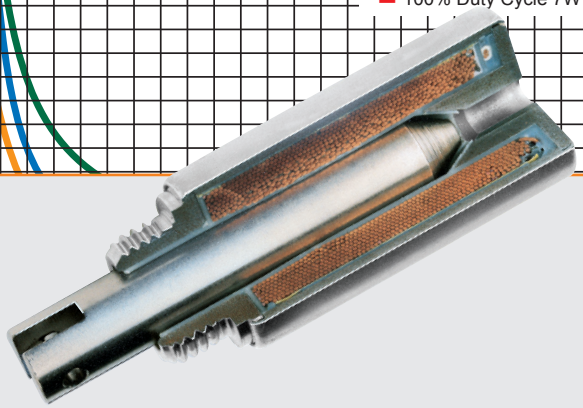

JOHNSON ELECTRIC

innovating motion

Ledex® Tubular Solenoids

LINEAR Tubular

- STA® Series has enhanced design features and improved performance
- Push and pull models
- Strokes up to 64 mm
- Life rating of 25 million actuations for STA designs

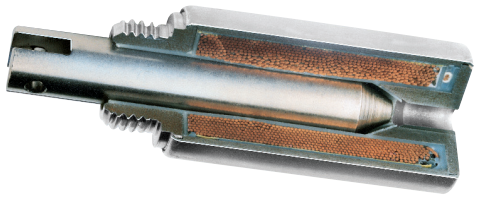

All catalogue products manufactured after April 1, 2006 are RoHS Compliant

The Ledex® STA Series of tubular solenoids is available in three sizes of 13, 20 and 26 mm diameter. Both push and pull types are available. Additionally, each size and type is available with a choice of two plunger configurations: flat face and 60°, as well as with or without an anti-rotation flat on the mounting bushing. These options offer maximum force for a wide range of applications. The new design also improves performance and provides longer life than previous tubular designs. They offer quiet operation and improved reliability for demanding applications

Magnetic latching versions are available for some models, and many models are well suited for battery operation.

Pull versus Push Type

In Pull type solenoids, the plunger is pulled into the solenoid coil when the coil is energised. In Push type solenoids, the same is true, however, the plunger has a shaft extension which then pushes out through a hole in the end of the solenoid case. Please note, however, that the magnetic field cannot be reversed to cause the opposite action to occur.

Performance Curves

The performance curves in this section serve as guides to determine the solenoid size needed to produce a desired force at a given stroke, duty cycle, and power source. All curves were developed under the following standard test conditions: ambient temperature of 20°C, 65% relative humidity.

Starting Force

When determining an application's force requirement, apply a 1.5 safety factor. For example: a load requiring 1.0 N of force should utilise a solenoid providing 1.0 N x 1.5 or 1.5 N of force.

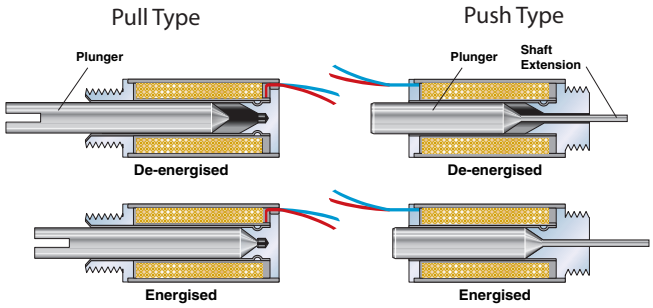

Duty Cycle

Duty cycle is determined by: ON time/(ON + OFF time).

For example: a solenoid is actuated for 30 seconds, then off for 90 seconds. 30 sec ON / (30 Sec ON + 90 sec OFF) = 30/120 = 1/4 or 25% duty cycle.

Ledex tubular solenoids are rated for various duty cycles ranging from continuous to 10% duty.

Note that maximum ON time for a particular application can be a factor which overrides the duty cycle rating. For example, at 25% duty cycle, the maximum ON time for a given Ledex solenoid is 36 seconds. If, however, the solenoid is operated at a cycle rate which enables the unit to return to ambient temperature between ON cycles, then the maximum ON time is extended somewhat. In the above example, this extended ON time is 44 seconds. Maximum ON time ratings are listed on the individual model specification pages.

Ledex® Tubular Solenoids

Life

When selecting a tubular solenoid, as with any other solenoid style, it is important to consider the effects of heat on life. When used with a constant voltage supply, an increase in coil temperature reduces the work output and the life of the unit. Standard life is 25,000,000 actuations for STA designs.

Power Requirements

Voltage applied to the solenoid must be matched to the coil wire size for proper operation. Solenoids are catalogued in coil awgs ranging from #23 up to #37 to accommodate your input power.

Refer to the individual model specification pages for coil wire awg recommendations. Many other coil awg sizes are available. Please feel free to contact our application engineering department for availability.

Tubular Applications

The STA Series is particularly ideal for applications where field service is prohibitive. Its long life and high reliability are definite advantages in applications involving:

- Computer peripherals
- Industrial sewing machines
- Automated teller machines
- Blood analyzers
- Gate mechanisms
- Packaging machinery
- Door interlocks
- Sorting machines
- Glue dispensers
- Laboratory equipment
- Business machines

STA Construction

The STA is constructed with a low friction nylon bobbin which insures a 25 million actuations life rating on all models.

The problems associated with powdered metal flaking in typical tubular designs is eliminated with the metal-to-plastic bearing surface. In addition, the new design's case is rolled over both ends of the unit for greater shock and vibration integrity, allowing the STA to withstand severe applications in which typical solenoids may come apart.

Both push and pull models offer a built-in combination air gap spacer and plunger stop. This feature eliminates the need for external E-rings and impact washers which typically fail prematurely, as well as get in the way of your attached mechanisms.

All units are provided with 250 mm PVC lead wires as standard, and are rated for a maximum coil temperature of 130°C. UL-approved materials are used in the construction. For higher temperature applications up to 180°C, please consult the factory for alternate materials which are available in some models. Mechanical and electrical ratings may also be affected. Other options include: special plunger configurations, springs, special mounting features, and anti-rotation flats on mounting bushings. Please consult the factory with details about your application as tooling may apply to some features.

STA Plunger Configurations

With two standard plunger configurations to choose from, the new STA Series offers stroke lengths up to 20 mm and up to 107 N of force.

A. Flat Face

For strokes typically less than 1.5 mm, the flat face plunger is recommended with a pull or push force three to five times greater than 60° plungers.

B. 60° Angle

For longer strokes up to 20 mm, the 60° plunger offers the greatest advantage over the flat face plunger.

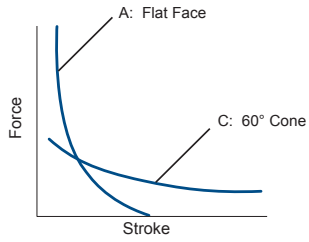

Size 125M and 150M Standard Tubular Models for Large Loads

Ledex Size 125M and 150M standard tubular models are offered for heavy duty applications requiring larger forces. These standard models are all pull type and offered with 60° plungers. These models feature heavy duty welded mounting brackets, and heavy duty plunger stops to limit plunger travel, provide positive stopping, and keep pole faces from slamming together at the end of stroke.

An impact cushion made of resilient non-magnetic material absorbs energy at the end of the stroke. This cushion also helps eliminate residual magnetism.

Size 125M and 150M models are available with other plunger configurations, in push type models, and with other mountings. Please consult the factory as tooling may apply.

Ledex® Tubular Solenoids Selection

Tubular solenoids are available in seven sizes. The four STA Series sizes are available in both push and pull types.

Use the selection overview chart to determine which size offers the desired performance and mechanical specifications.

Refer to the individual size specification pages for complete performance and mechanical data.

Options and Modified Designs

Even though many solenoid designs are in stock and available via distribution, our customers often require a product with unique features or performance capabilities. In fact, almost 80% of all solenoids that we make are either modified or custom built to meet our customers' exact application requirements.

So, if you don't find what you're looking for in the catalogue, give us a call to discuss your needs with one of our application engineers.

Typical Examples of Custom Features

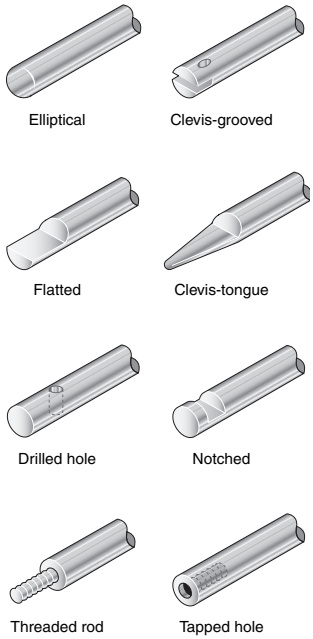

How to Use Tubular Performance Charts

1. Select one of the four columns which provides the appropriate duty cycle. (For example 50%.)

2. Reading down this column provides a variety of performance and electrical data including maximum on time, watts, and amp turns.

3. Following down the column further into the VDC ratings, select the voltage which most closely matches your supply voltage. (For example, 11.5 for a 12 VDC power supply.)

4. Read across (to the left) to select the awg suffix . (In this example, 32 awg is required, thus to order, specify: 195223-232.
Note that the digit preceding the awg refers to the plunger configuration and anti-rotation flat selected. The size 125M and 150M standard models do not use this plunger configuration and anti-rotation flat suffix system.

Performance

Maximum Duty Cycle	100%	50%	25%	10%
Maximum ON Time (sec) when pulsed continuously	∞	50	5	2
Maximum ON Time (sec) for single pulse	∞	140	30	8
Watts (@ 20°C)	4	8	16	40
Ampere Turns (@ 20°C)	497	704	994	1573

Coil Data						
awg (0XX)	Resistance (@20°C)	# Turns	VDC (Nom)	VDC (Nom)	VDC (Nom)	VDC (Nom)
27	1.43	306	2.4	3.4	4.8	7.6
28	1.95	342	2.8	3.9	5.6	8.8
29	3.84	508	3.9	5.5	7.8	12.4
30	5.29	572	4.6	6.5	9.2	14.5
31	9.56	795	6.2	8.8	12.4	19.6
32	16.54	1068	8.1	11.5	16.3	25.7
33	22.60	1194	9.5	13.4	19.0	30.0
34	37.41	1547	12.2	17.3	24.0	39.0
35	60.71	1976	15.6	22.0	31.0	49.0
36	96.19	2475	19.6	28.0	39.0	62.0
37	149.93	3060	24.5	35.0	49.0	77.0

Ledex® Tubular Solenoids Design Modifications

Size	Solenoid Type	Package Dimension (mm)		Max Stroke (mm)	Nominal Stroke (mm)	Force (N) @ Nominal Stroke and Specified Duty Cycle			
		Dia.	Length			100%	50%	25%	10%
Size 50M–STA-Mini 13 x 14 ●♦★⬟	Pull	13.2	13.9	2.5	1.3	0.80	1.33	2.22	4.45
Size 50M–STA -Mini 13 x 16 ●★■⬟	Pull - Latching	13.2	15.7	3.8	1.9	–	1.11	2.14	3.34
Size 50M–STA-Mini 13 x 14 ●♦★⬟	Push	13.2	13.9	2.5	1.3	0.49	0.80	1.47	2.49
Size 51M–STA 13 x 27 ●♦★⬟	Pull	13.2	26.7	12.5	2.5	0.93	1.56	2.58	4.45
Size 51M–STA 13 x 27 ●♦★⬟	Push	13.2	26.7	12.5	2.5	0.67	1.11	2.09	4.05
Size 75M–STA 20 x 40 ●♦★	Pull	19.6	39.4	17.5	7.6	1.33	2.89	5.34	9.56
Size 75M–STA 20 x 40 ●♦★	Push	19.6	39.4	17.5	7.6	1.11	2.45	5.12	9.56
Size 75QM–STA-Q 20 x 41 ●♦★⬬	Pull	19.6	40.6	30.0	17.8	1.33	2.58	4.31	7.47
Size 75DM–STA-D 20 x 41 ●♦★⬬	Pull	19.6	40.6	17.5	5.1	2.22	4.00	6.23	10.68
Size 75DM–STA-D 20 x 41 ●♦★⬬	Push	19.6	40.6	17.5	5.1	1.69	3.34	6.23	11.57
Size 102M–STA 26 x 30 ♦★	Pull	25.9	30.0	12.5	5.0	3.34	6.67	12.46	25.80
Size 102M–STA 26 x 30 ♦★	Push	25.9	30.0	12.5	5.0	2.00	4.00	8.00	17.80
Size 100M–STA 26 x 52 ♦★	Pull	25.9	52.1	17.5	7.6	2.89	7.12	13.35	23.14
Size 100M–STA 26 x 52 ♦★	Push	25.9	52.1	17.5	7.6	3.34	6.67	12.46	23.14
Size 125 32 x 57	Pull	31.8	57.2	19.1	10.2	4.45	8.90	17.80	28.92
Size 150 38 x 64	Pull	38.1	63.5	19.1	10.2	4.45	11.12	23.14	43.61

All data is at 20°C coil temperature. Force outputs degrade with elevated temperatures.

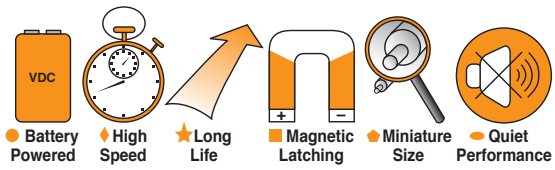

Size 50M–STA®-Mini Pull Tubular Solenoids — 13 mm Dia. x 14 mm

LINEAR Tubular

Part Number: 195220 - X XX

All products are RoHS Compliant

Coil AWG Number
(from performance chart below)

Plunger Configurations and anti-rotation flat on mounting
2 60° plunger without anti-rotation flat
6 60° plunger with anti-rotation flat

Performance

Maximum Duty Cycle	100%	50%	25%	10%
Maximum ON Time (sec) when pulsed continuously[1]	∞	50	5	2
Maximum ON Time (sec) for single pulse[2]	∞	140	30	8
Watts (@ 20°C)	3	6	12	30
Ampere Turns (@ 20°C)	268	379	536	847

Coil Data

awg (0XX)[3]	Resistance (@20°C)	# Turns[4]	VDC (Nom)	VDC (Nom)	VDC (Nom)	VDC (Nom)
27	0.48	108	1.2	1.7	2.4	3.8
28	0.67	123	1.5	2.1	2.9	4.6
29	1.33	184	1.9	2.7	3.9	6.1
30	1.80	204	2.4	3.3	4.7	7.5
31	3.33	290	3.1	4.4	6.2	9.7
32	4.57	325	3.8	5.3	7.5	11.9
33	7.80	432	4.8	6.8	9.7	15.3
34	13.10	567	6.2	8.8	12.4	19.6
35	17.80	630	7.6	11.0	15.0	24.0
36	29.05	808	9.6	14.0	19.0	30.0
37	45.70	1008	12.2	17.0	24.0	38.0

[1] Continuously pulsed at stated watts and duty cycle
[2] Single pulse at stated watts (with coil at ambient room temperature 20°C)
[3] Other coil awg sizes available — please consult factory
[4] Reference number of turns

Specifications

Dielectric Strength	500 VRMS
Recommended Minimum Heat Sink	Maximum watts dissipated by solenoid are based on an unrestricted flow of air at 20°C, with solenoid mounted on the equivalent of an aluminium plate measuring 51 mm square by 3.2 mm thick
Coil Resistance	±5% tolerance
Weight	14.5 g
Plunger Weight	2.5 g

How to Order

Add the plunger configuration, anti-rotation flat number, and the coil awg number to the part number (for example: to order a unit with a 60° plunger configuration without an anti-rotation flat rated for 4.7 VDC at 25% duty cycle, specify 195220-230.

Please see www.johnsonelectric.com for our list of stock products available through distribution.

All specifications subject to change without notice.

Size 50M–STA®-Mini Pull Tubular Solenoids — 13 mm Dia. x 14 mm

Typical Force @ 20°C

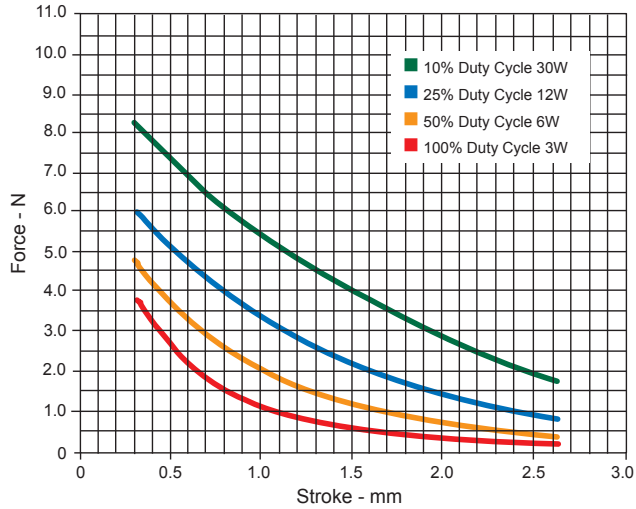

Force values for reference only.

Typical Speed @ No Load, 20°C

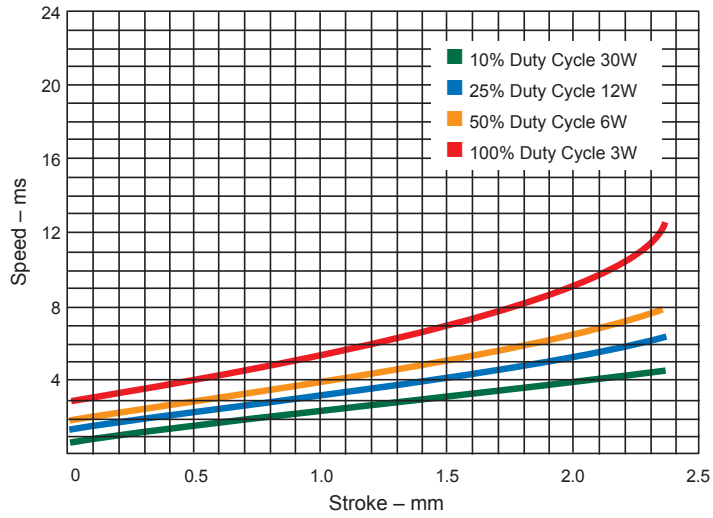

Dimensions

mm

All solenoids are illustrated in energised state

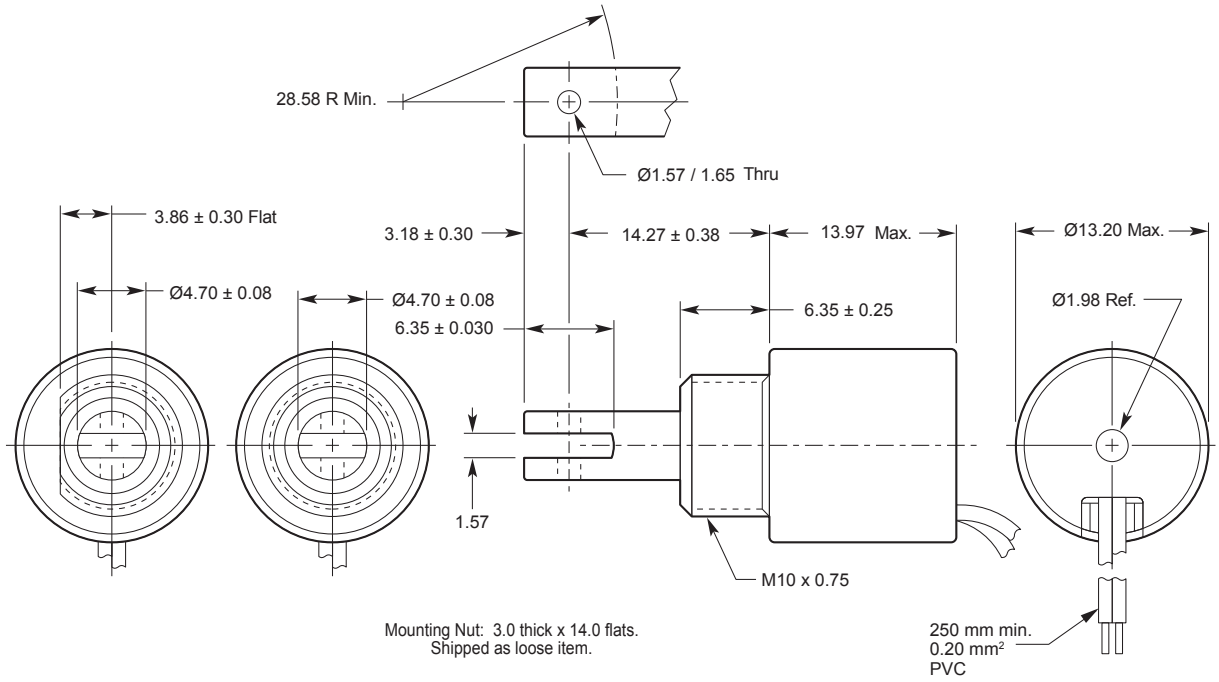

Size 50M–STA®-Mini Pull Magnetic Latching Solenoid — 13 mm Dia. x 16 mm

LINEAR Tubular

Part Number: 151094 - X XX

All products are RoHS Compliant

Coil AWG Number
(from performance chart below)

Plunger Configurations and anti-rotation flat on mounting
1 Flat Face plunger without anti-rotation flat on mounting
2 60° plunger without anti-rotation flat on mounting
5 Flat Face plunger with anti-rotation flat on mounting
6 60° plunger with anti-rotation flat on mounting

Performance

Maximum Duty Cycle	Unlatched Voltage	50%	25%	10%
Maximum ON Time (sec) when pulsed continuously[1]	n/a	50	5	2
Watts (@ 20°C)	3	6	12	30
Ampere Turns (@ 20°C)	268	379	536	847

Coil Data

awg (0XX)[2]	Resistance (@20°C)	# Turns[3]	Unlatched VDC	VDC (Nom)	VDC (Nom)	VDC (Nom)
27	0.48	108	1.2	1.7	2.4	3.8
28	0.67	123	1.5	2.1	2.9	4.6
29	1.33	184	1.9	2.7	4.0	6.1
30	1.80	204	2.4	3.3	4.7	7.5
31	3.33	290	3.1	4.4	6.2	9.7
32	4.57	325	3.8	5.3	7.5	11.9
33	7.80	432	4.8	6.8	9.7	15.3
34	13.10	567	6.2	8.8	12.4	20.0
35	17.80	630	7.6	11.0	15.0	24.0
36	29.05	808	9.6	14.0	19.0	30.0
37	45.70	1008	12.2	17.0	24.0	38.0

[1] Continuously pulsed at stated watts and duty cycle
[2] Other coil awg sizes available — please consult factory
[3] Reference number of turns

Specifications

Operation	Pull
Dielectric Strength	500 VRMS
Recommended Minimum Heat Sink	Maximum watts dissipated by solenoid are based on an unrestricted flow of air at 20°C, with solenoid mounted on the equivalent of an aluminium plate measuring 51 mm square by 3.2 mm thick
Unlatch Voltage	See schematic and coil data
Magnet Hold Force	2 N (with return spring)
Spring Force	0.38 N/mm; 1.2 N latched position
Weight	14.7 g
Plunger Weight	2.6 g

How to Order

Add the plunger configuration, anti-rotation flat number, and the coil awg number to the part number (for example: to order a 60° plunger unit without an anti-rotation flat, rated for 4.7 VDC at 25% duty cycle, specify 151094-230.

Please see www.johnsonelectric.com for our list of stock products available through distribution.

Coil Polarity

Latch: A+ B-

Unlatch: A- B+

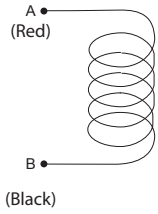

All specifications subject to change without notice.

Size 50M–STA®-Mini Pull Magnetic Latching Solenoid — 13 mm Dia. x 16 mm

Typical Force @ 20°C

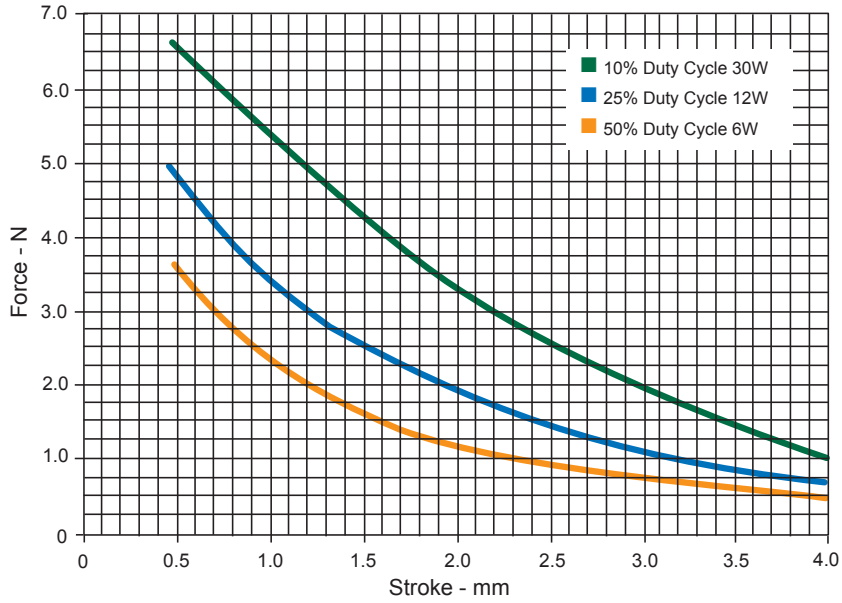

Force values for reference only.

Dimensions

mm

All solenoids are illustrated in energised state

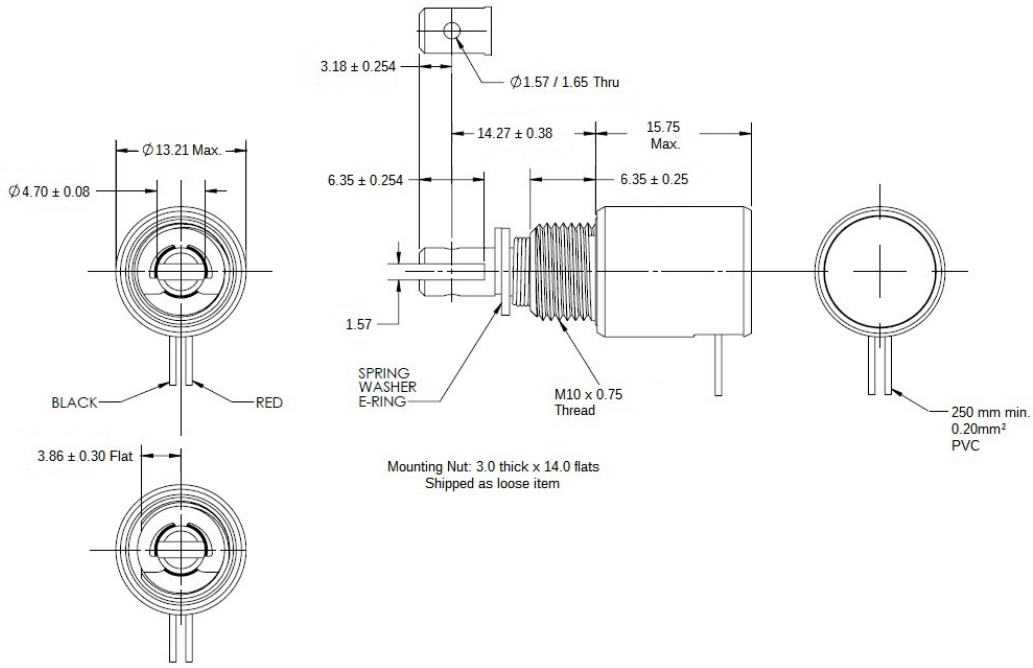

Size 50M–STA®-Mini Push Tubular Solenoids — 13 mm Dia. x 14 mm

LINEAR Tubular

Part Number: 195221-X XX

All products are RoHS Compliant

Coil AWG Number
(from performance chart below)

Plunger Configurations and anti-rotation flat on mounting
2 60° plunger without anti-rotation flat
6 60° plunger with anti-rotation flat

Performance

Maximum Duty Cycle	100%	50%	25%	10%
Maximum ON Time (sec) when pulsed continuously[1]	∞	50	5	2
Maximum ON Time (sec) for single pulse[2]	∞	140	30	8
Watts (@ 20°C)	3	6	12	30
Ampere Turns (@ 20°C)	268	379	536	847

Coil Data

awg (0XX)[3]	Resistance (@20°C)	# Turns[4]	VDC (Nom)	VDC (Nom)	VDC (Nom)	VDC (Nom)
27	0.48	108	1.2	1.7	2.4	3.8
28	0.67	123	1.5	2.1	2.9	4.6
29	1.33	184	1.9	2.7	3.9	6.1
30	1.80	204	2.4	3.3	4.7	7.5
31	3.33	290	3.1	4.4	6.2	9.7
32	4.57	325	3.8	5.3	7.5	11.9
33	7.80	432	4.8	6.8	9.7	15.3
34	13.10	567	6.2	8.8	12.4	19.6
35	17.80	630	7.6	11.0	15.0	24.0
36	29.05	808	9.6	14.0	19.0	30.0
37	45.70	1008	12.2	17.0	24.0	38.0

[1] Continuously pulsed at stated watts and duty cycle
[2] Single pulse at stated watts (with coil at ambient room temperature 20°C)
[3] Other coil awg sizes available — please consult factory
[4] Reference number of turns

Specifications

Dielectric Strength	500 VRMS
Recommended Minimum Heat Sink	Maximum watts dissipated by solenoid are based on an unrestricted flow of air at 20°C, with solenoid mounted on the equivalent of an aluminium plate measuring 51 mm square by 3.2 mm thick
Coil Resistance	±5% tolerance
Weight	14.5 g
Plunger Weight	1.2 g

How to Order

Add the plunger configuration, anti-rotation flat number, and the coil awg number to the part number (for example: to order a unit with a 60° plunger configuration without an anti-rotation flat rated for 4.7 VDC at 25% duty cycle, specify 195221-230.

Please see www.johnsonelectric.com for our list of stock products available through distribution.

All specifications subject to change without notice.

Size 50M–STA®-Mini Push Tubular Solenoids — 13 mm Dia. x 14 mm

Typical Force @ 20°C

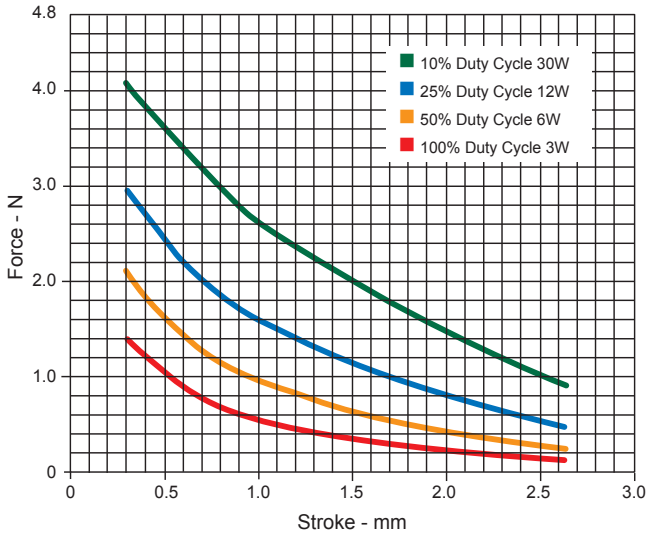

Force values for reference only.

Typical Speed @ No Load, 20°C

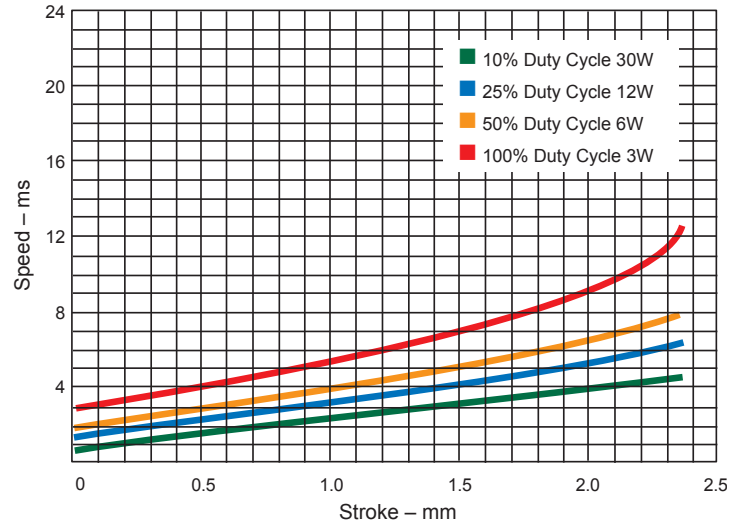

Dimensions

mm

All solenoids are illustrated in energised state

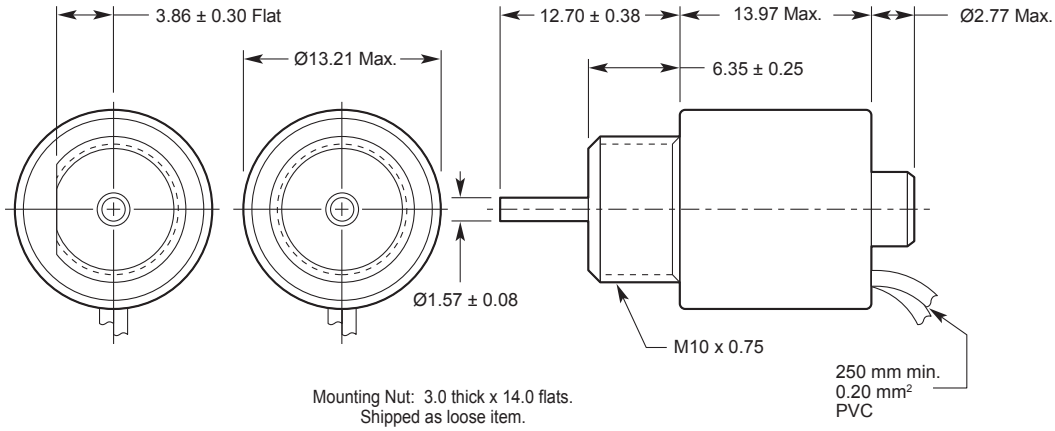

Size 51M–STA® Pull Tubular Solenoids — 13 mm Dia. x 27 mm

LINEAR Tubular

Part Number: 195222 - X XX

All products are RoHS Compliant

Coil AWG Number
(from performance chart below)

Plunger Configurations and anti-rotation flat on mounting
1 Flat face plunger without anti-rotation flat
2 60° plunger without anti-rotation flat
5 Flat face plunger with anti-rotation flat
6 60° plunger with anti-rotation flat

Battery Powered

High Speed

Long Life

Miniature Size

Performance

Maximum Duty Cycle	100%	50%	25%	10%
Maximum ON Time (sec) when pulsed continuously[1]	∞	50	5	2
Maximum ON Time (sec) for single pulse[2]	∞	140	30	8
Watts (@ 20°C)	4	8	16	40
Ampere Turns (@ 20°C)	497	704	994	1573

Coil Data

awg (0XX)[3]	Resistance (@20°C)	# Turns[4]	VDC (Nom)	VDC (Nom)	VDC (Nom)	VDC (Nom)
27	1.43	306	2.4	3.4	4.8	7.6
28	1.95	342	2.8	3.9	5.6	8.8
29	3.84	508	3.9	5.5	7.8	12.4
30	5.29	572	4.6	6.5	9.2	14.5
31	9.56	795	6.2	8.8	12.4	19.6
32	16.54	1068	8.1	11.5	16.3	25.7
33	22.60	1194	9.5	13.4	19.0	30.0
34	37.41	1547	12.2	17.3	24.0	39.0
35	60.71	1976	15.6	22.0	31.0	49.0
36	96.19	2475	19.6	28.0	39.0	62.0
37	141.93	3060	23.8	33.7	47.6	75.3

[1] Continuously pulsed at stated watts and duty cycle
[2] Single pulse at stated watts (with coil at ambient room temperature 20°C)
[3] Other coil awg sizes available — please consult factory
[4] Reference number of turns

Specifications

Dielectric Strength	500 VRMS
Recommended Minimum Heat Sink	Maximum watts dissipated by solenoid are based on an unrestricted flow of air at 20°C, with solenoid mounted on the equivalent of an aluminium plate measuring 51 mm square by 3.2 mm thick
Coil Resistance	±5% tolerance
Holding Force	Flat Face: 5.3 N @ 20°C 60°: 4.0 N @ 20°C
Weight	24.7 g
Plunger Weight	4.5 g

How to Order

Add the plunger configuration, anti-rotation flat number, and the coil awg number to the part number (for example: to order a unit with a 60° plunger configuration without an anti-rotation flat rated for 4.8 VDC at 25% duty cycle, specify 195222-227.

Please see www.johnsonelectric.com for our list of stock products available through distribution.

All specifications subject to change without notice.

Size 51M–STA® Pull Tubular Solenoids — 13 mm Dia. x 27 mm

Flat Face Plunger

Typical Force @ 20°C

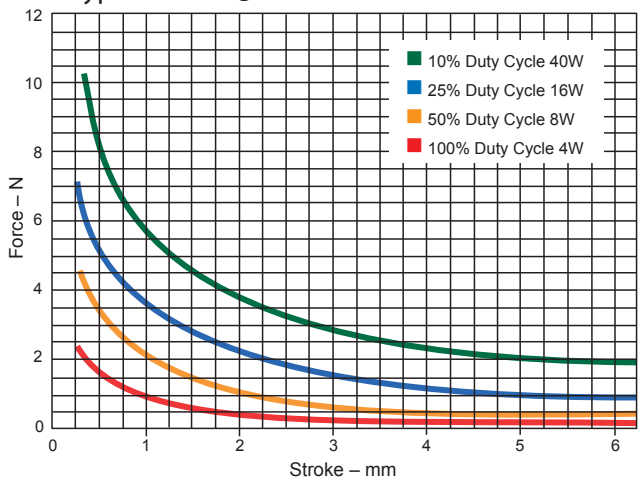

Typical Speed @ No Load, 20°C

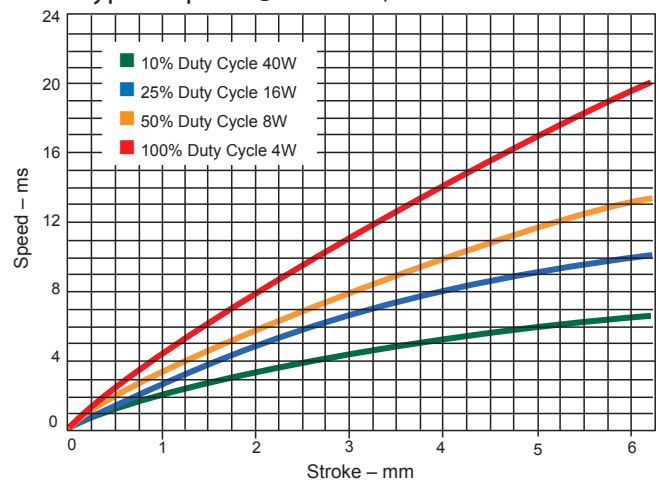

60° Plunger

Typical Force @ 20°C

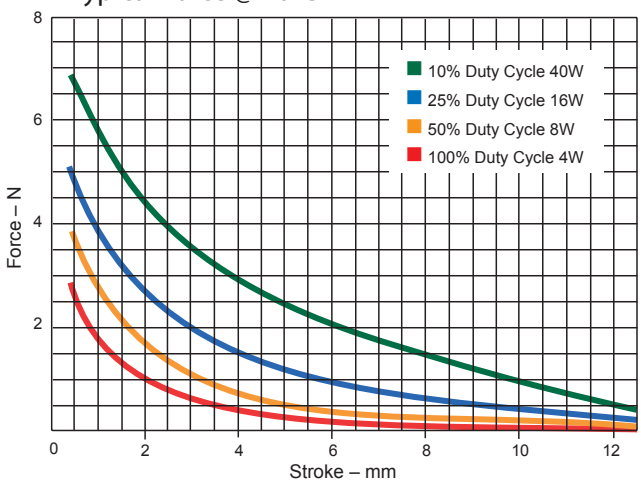

Typical Speed @ No Load, 20°C

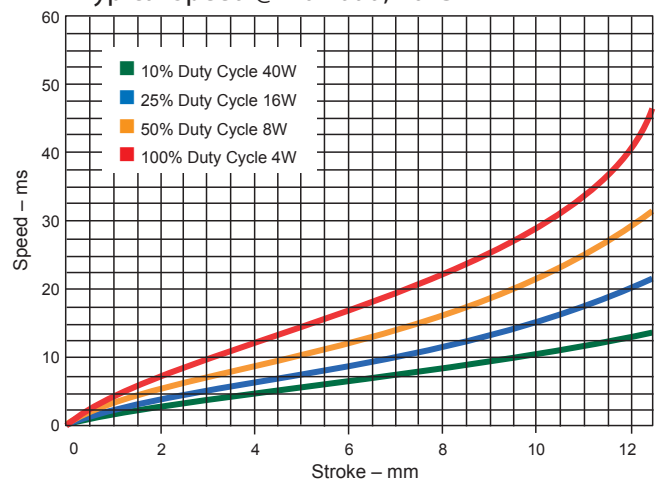

Force values for reference only.

Dimensions

mm

All solenoids are illustrated in energised state

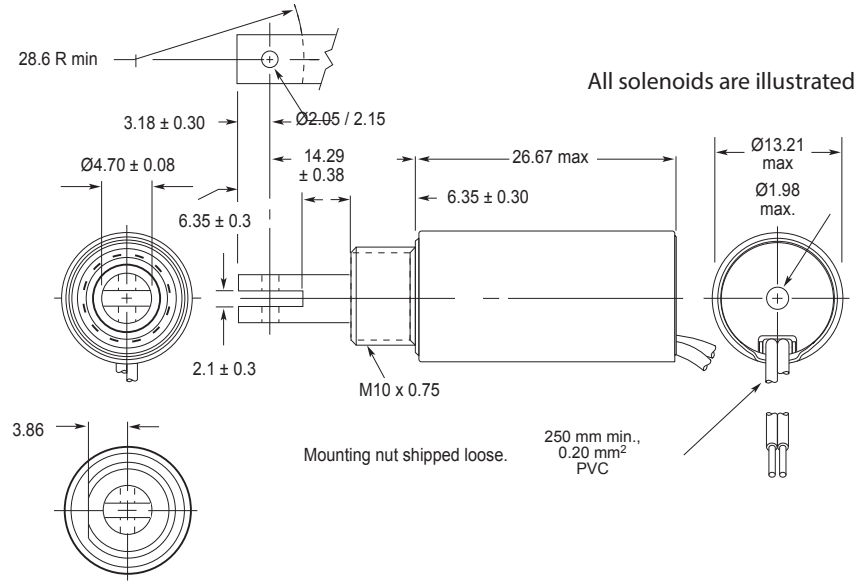

Size 51M–STA® Push Tubular Solenoids — 13 mm Dia. x 27 mm

LINEAR Tubular

Part Number: 195223 - X XX

All products are RoHS Compliant

Coil AWG Number
(from performance chart below)

Plunger Configurations and anti-rotation flat on mounting
1 Flat face plunger without anti-rotation flat
2 60° plunger without anti-rotation flat
5 Flat face plunger with anti-rotation flat
6 60° plunger with anti-rotation flat

Performance

Maximum Duty Cycle	100%	50%	25%	10%
Maximum ON Time (sec) when pulsed continuously[1]	∞	50	5	2
Maximum ON Time (sec) for single pulse[2]	∞	140	30	8
Watts (@ 20°C)	4	8	16	40
Ampere Turns (@ 20°C)	497	704	994	1573

Coil Data

awg (0XX)[3]	Resistance (@20°C)	# Turns[4]	VDC (Nom)	VDC (Nom)	VDC (Nom)	VDC (Nom)
27	1.43	306	2.4	3.4	4.8	7.6
28	1.95	342	2.8	3.9	5.6	8.8
29	3.84	508	3.9	5.5	7.8	12.4
30	5.29	572	4.6	6.5	9.2	14.5
31	9.56	795	6.2	8.8	12.4	19.6
32	16.54	1068	8.1	11.5	16.3	25.7
33	22.60	1194	9.5	13.4	19.0	30.0
34	37.41	1547	12.2	17.3	24.0	39.0
35	60.71	1976	15.6	22.0	31.0	49.0
36	96.19	2475	19.6	28.0	39.0	62.0
37	141.93	3060	23.8	33.7	47.6	75.3

[1] Continuously pulsed at stated watts and duty cycle
[2] Single pulse at stated watts (with coil at ambient room temperature 20°C)
[3] Other coil awg sizes available — please consult factory
[4] Reference number of turns

Specifications

Dielectric Strength	500 VRMS
Recommended Minimum Heat Sink	Maximum watts dissipated by solenoid are based on an unrestricted flow of air at 20°C, with solenoid mounted on the equivalent of an aluminium plate measuring 51 mm square by 3.2 mm thick
Coil Resistance	±5% tolerance
Holding Force	Flat Face: 4.5 N @ 20°C 60°: 3.2 N @ 20°C
Weight	25.2 g
Plunger Weight	3.1 g

How to Order

Add the plunger configuration, anti-rotation flat number and the coil awg number to the part number (for example: to order a unit with a 60° plunger configuration without anti-rotation rated for 4.8 VDC at 25% duty cycle, specify 195223-227.

Please see www.johnsonelectric.com for our list of stock products available through distribution.

All specifications subject to change without notice.

Size 51M–STA® Push Tubular Solenoids — 13 mm Dia. x 27 mm

Flat Face Plunger

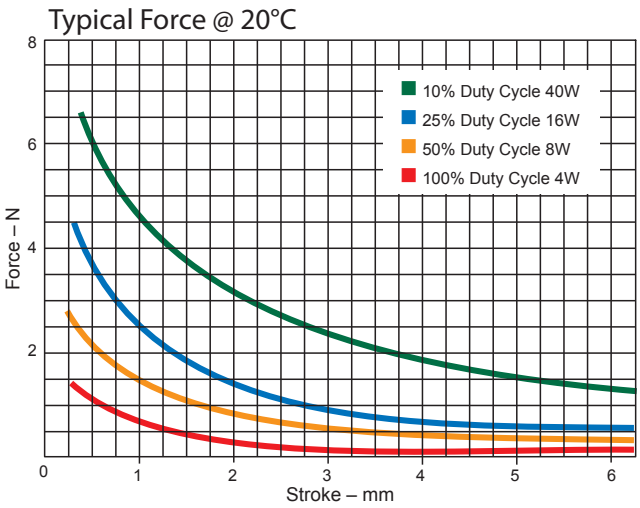

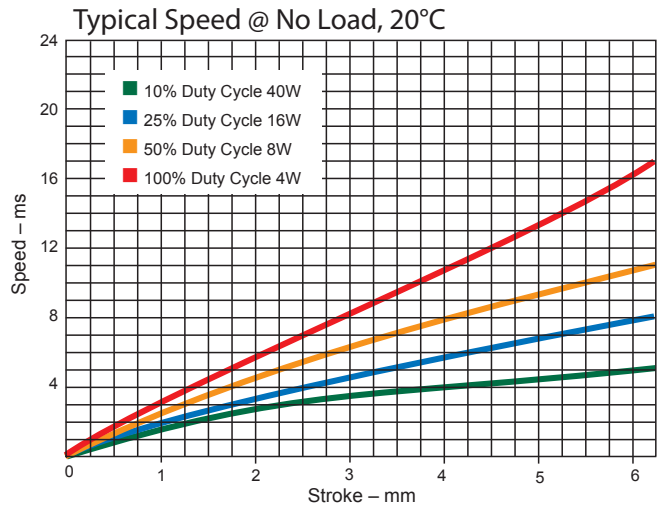

60° Plunger

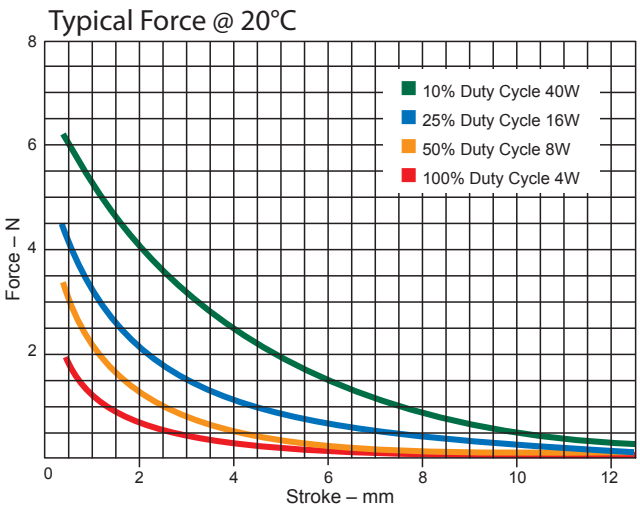

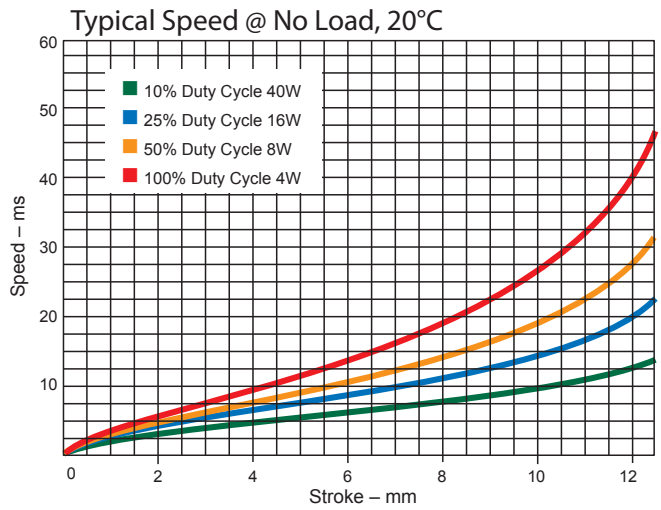

Force values for reference only.

mm

Dimensions

All solenoids are illustrated in energised state

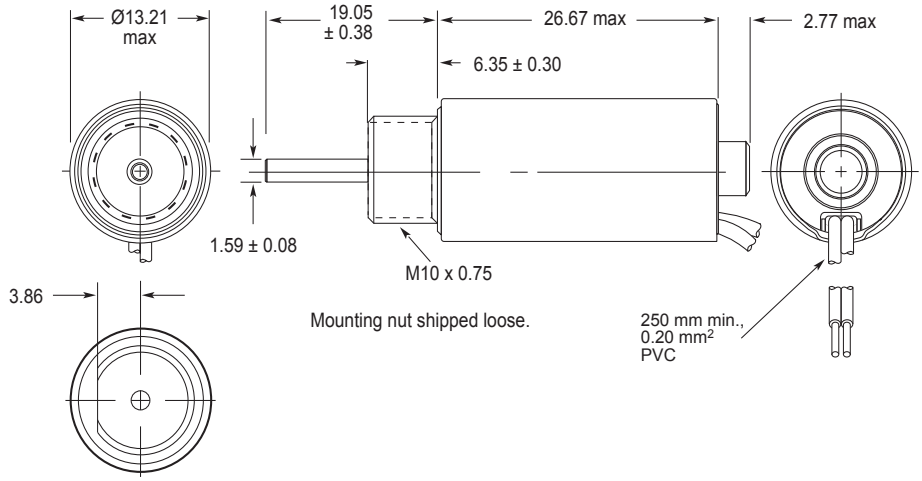

Size 75M–STA® Pull Tubular Solenoids — 20 mm Dia. x 40 mm

LINEAR Tubular

Part Number: 195224 - X XX

All products are RoHS Compliant

Coil AWG Number
(from performance chart below)

Plunger Configurations and anti-rotation flat on mounting
1 Flat face plunger without anti-rotation flat
2 60° plunger without anti-rotation flat
5 Flat face plunger with anti-rotation flat
6 60° plunger with anti-rotation flat

Performance

Battery Powered

High Speed

Long Life

Maximum Duty Cycle	100%	50%	25%	10%
Maximum ON Time (sec) when pulsed continuously[1]	∞	230	25	6
Maximum ON Time (sec) for single pulse[2]	∞	265	63	15
Watts (@ 20°C)	7	14	28	70
Ampere Turns (@ 20°C)	855	1200	1700	2700

Coil Data

awg (0XX)[3]	Resistance (@20°C)	# Turns[4]	VDC (Nom)	VDC (Nom)	VDC (Nom)	VDC (Nom)
24	1.10	330	2.7	3.8	5.6	8.8
25	2.13	488	3.9	5.5	7.7	12.2
26	2.90	544	4.5	6.4	9.0	14.2
27	5.27	760	6.1	8.6	12.1	19.2
28	9.15	1026	8.0	11.3	16.0	25.0
29	12.50	1146	9.4	13.2	18.7	30.0
30	20.70	1491	12.0	17.0	24.0	38.0
31	33.60	1904	15.0	22.0	31.0	48.0
32	53.50	2394	19.4	27.0	39.0	61.0
33	83.50	2970	24.0	34.0	48.0	76.0

[1] Continuously pulsed at stated watts and duty cycle
[2] Single pulse at stated watts (with coil at ambient room temperature 20°C)
[3] Other coil awg sizes available — please consult factory
[4] Reference number of turns

Specifications

Dielectric Strength	1000 VRMS
Recommended Minimum Heat Sink	Maximum watts dissipated by solenoid are based on an unrestricted flow of air at 20°C, with solenoid mounted on the equivalent of an aluminium plate measuring 76 mm square by 3.2 mm thick
Coil Resistance	±5% tolerance
Holding Force	Flat Face: 23.3 N @ 20°C 60°: 12.8 N @ 20°C
Weight	83.6 g
Plunger Weight	20.1 g

How to Order

Add the plunger number and the coil awg number to the part number (for example: to order a unit with a flat face plunger configuration without an anti-rotation flat rated for 12.1 VDC at 25% duty cycle, specify 195224-127.

Please see www.johnsonelectric.com for our list of stock products available through distribution.

All specifications subject to change without notice.

Size 75M–STA® Pull Tubular Solenoids — 20 mm Dia. x 40 mm

Flat Face Plunger

Typical Force @ 20°C

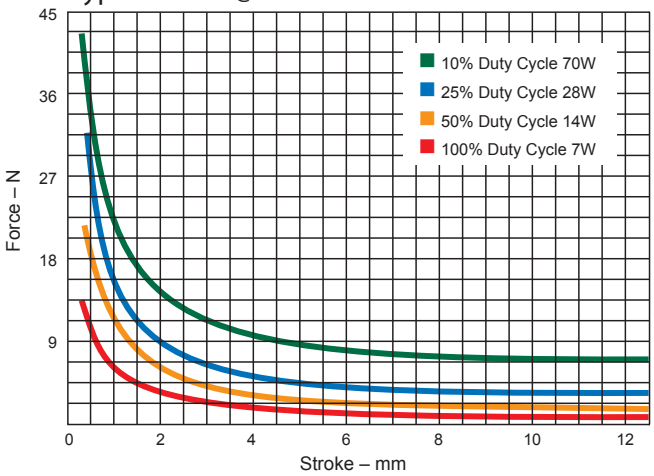

Typical Speed @ No Load, 20°C

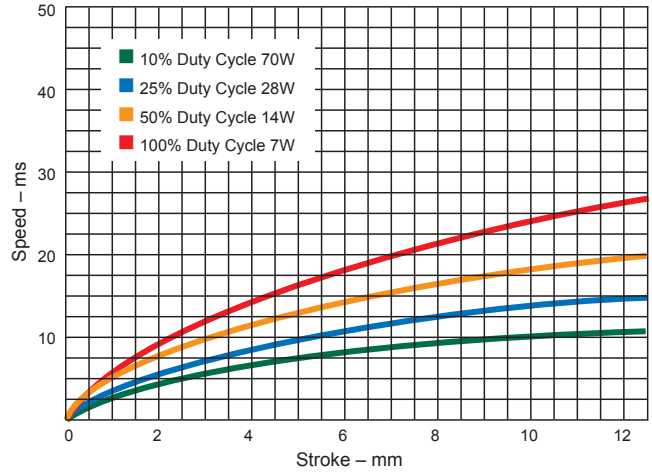

60° Plunger

Typical Force @ 20°C

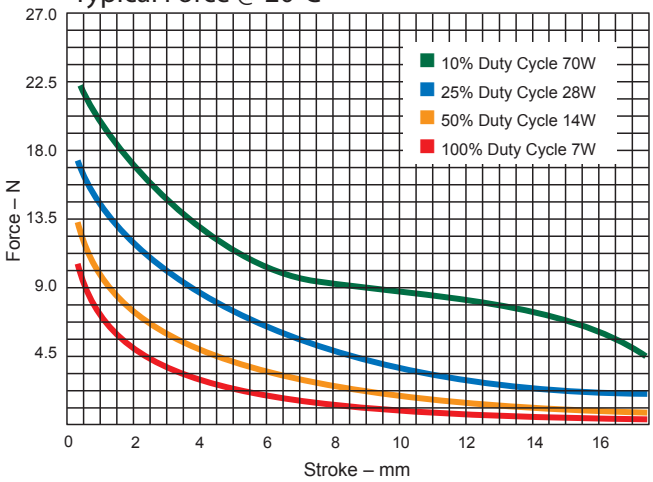

Typical Speed @ No Load, 20°C

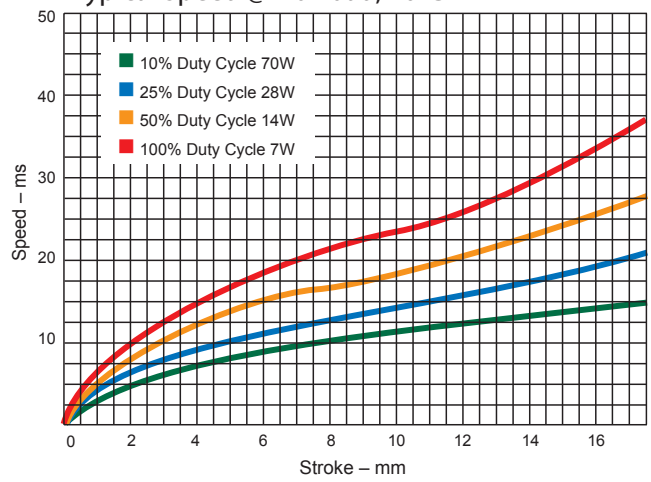

Force values for reference only.

Dimensions

mm

All solenoids are illustrated in energised state

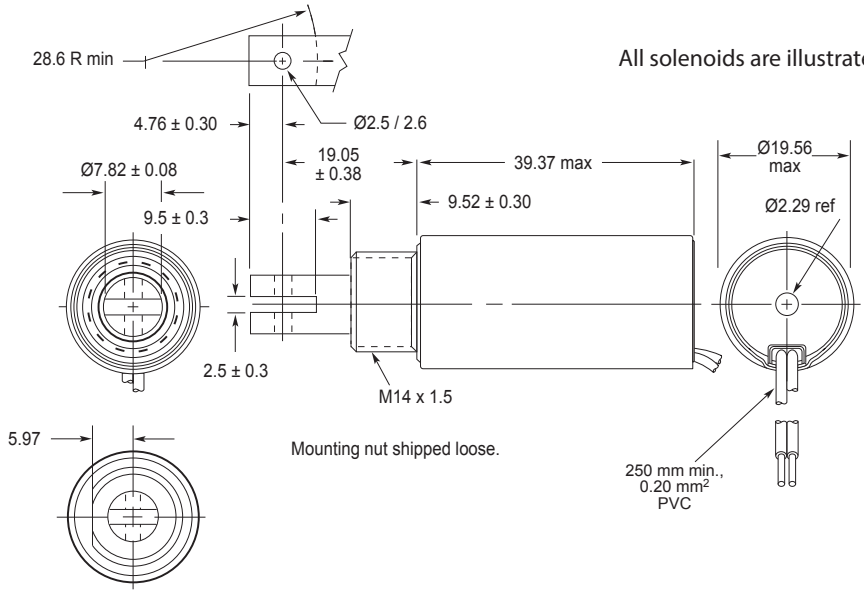

Size 75M–STA® Push Tubular Solenoids — 20 mm Dia. x 40 mm

LINEAR Tubular

Part Number: 195225 - X XX

All products are RoHS Compliant

Coil AWG Number
(from performance chart below)

Plunger Configurations and anti-rotation flat on mounting
1 Flat face plunger without anti-rotation flat
2 60° plunger without anti-rotation flat
5 Flat face plunger with anti-rotation flat
6 60° plunger with anti-rotation flat

Performance

VDC
Battery Powered

High Speed

Long Life

Maximum Duty Cycle	100%	50%	25%	10%
Maximum ON Time (sec) when pulsed continuously[1]	∞	230	25	6
Maximum ON Time (sec) for single pulse[2]	∞	265	63	15
Watts (@ 20°C)	7	14	28	70
Ampere Turns (@ 20°C)	855	1200	1700	2700

Coil Data

awg (0XX)[3]	Resistance (@20°C)	# Turns[4]	VDC (Nom)	VDC (Nom)	VDC (Nom)	VDC (Nom)
24	1.10	330	2.7	3.8	5.6	8.8
25	2.13	488	3.9	5.5	7.7	12.2
26	2.90	544	4.5	6.4	9.0	14.2
27	5.27	760	6.1	8.6	12.1	19.2
28	9.15	1026	8.0	11.3	16.0	25.0
29	12.50	1146	9.4	13.2	18.7	30.0
30	20.70	1491	12.0	17.0	24.0	38.0
31	33.60	1904	15.0	22.0	31.0	48.0
32	53.50	2394	19.4	27.0	39.0	61.0
33	83.50	2970	24.0	34.0	48.0	76.0

[1] Continuously pulsed at stated watts and duty cycle
[2] Single pulse at stated watts (with coil at ambient room temperature 20°C)
[3] Other coil awg sizes available — please consult factory
[4] Reference number of turns

Specifications

Dielectric Strength	1000 VRMS
Recommended Minimum Heat Sink	Maximum watts dissipated by solenoid are based on an unrestricted flow of air at 20°C, with solenoid mounted on the equivalent of an aluminium plate measuring 76 mm square by 3.2 mm thick
Coil Resistance	±5% tolerance
Holding Force	Flat Face: 22.0 N @ 20°C 60°: 12.7 N @ 20°C
Weight	87.3 g
Plunger Weight	15.0 g

How to Order

Add the plunger number and the coil awg number to the part number (for example: to order a unit with a 60° plunger configuration without an anti-rotation flat rated for 12.1 VDC at 25% duty cycle, specify 195225-227.

Please see www.johnsonelectric.com for our list of stock products available through distribution.

All specifications subject to change without notice.

Size 75M–STA® Push Tubular Solenoids — 20 mm Dia. x 40 mm

Flat Face Plunger

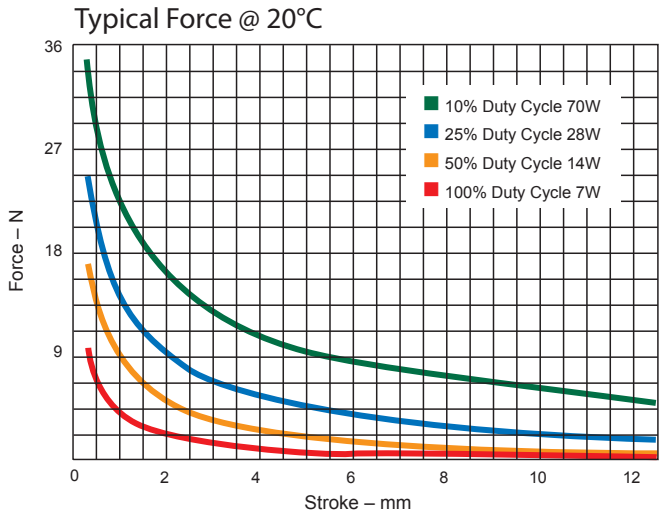

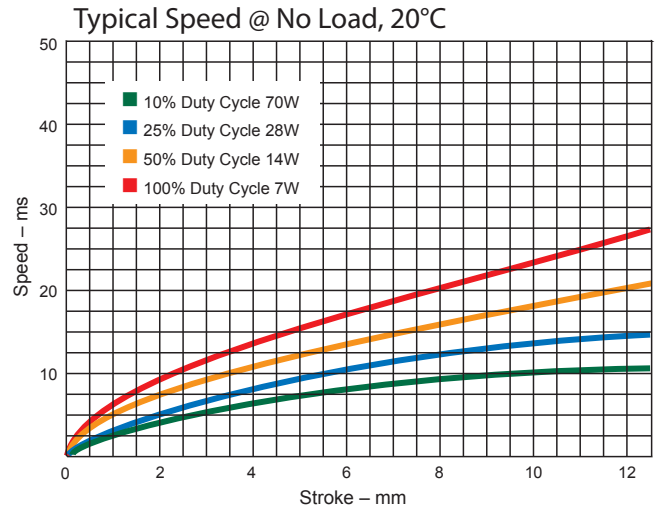

60° Plunger

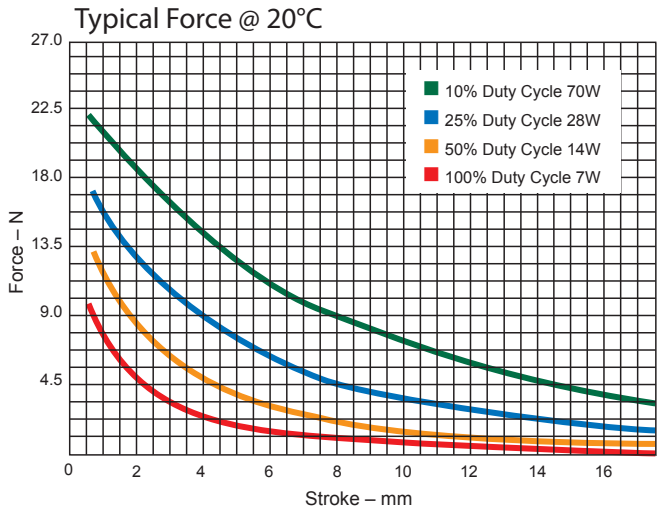

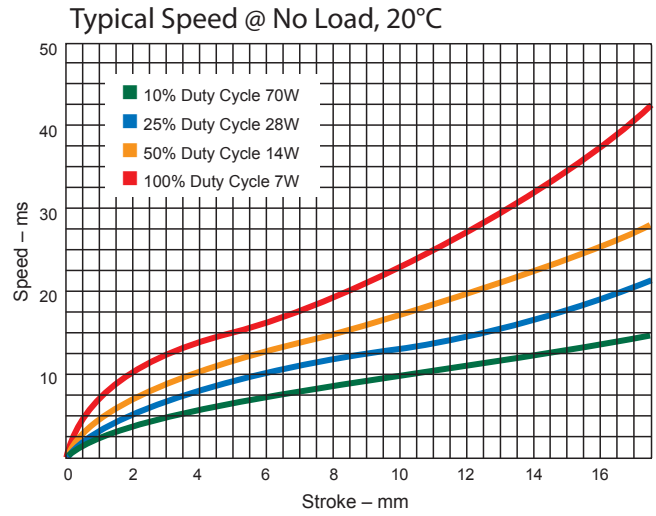

Force values for reference only.

Dimensions

mm

All solenoids are illustrated in energised state

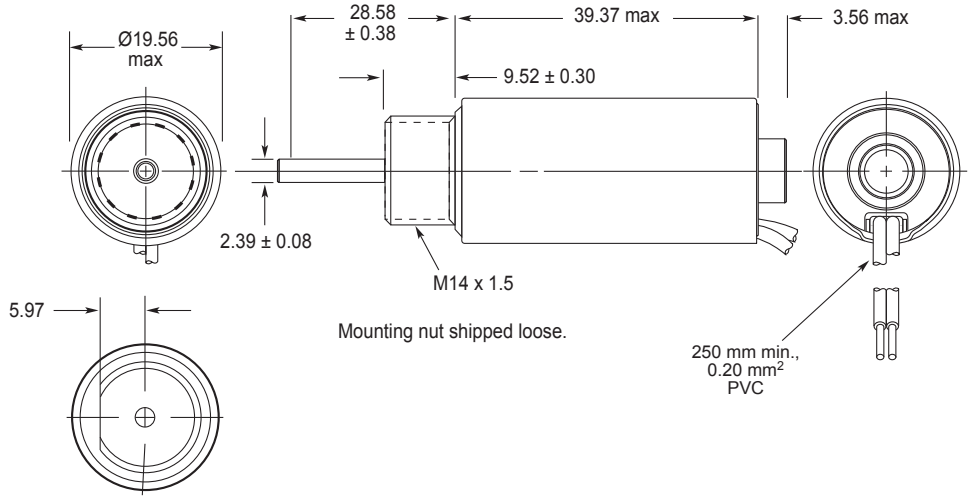

Size 75QM–STA®-Q Pull Tubular — 20 mm Dia. x 41 mm

LINEAR Tubular

Part Number: 153566 - X XX

All products are RoHS Compliant

Coil AWG Number
(from performance chart below)

Plunger Configurations and anti-rotation flat on mounting
1 Flat face plunger without anti-rotation flat
5 Flat face plunger with anti-rotation flat

Performance

Battery Powered

High Speed

Long Life

Quiet Performance

Maximum Duty Cycle	100%	50%	25%	10%
Maximum ON Time (sec) when pulsed continuously[1]	∞	230	25	6
Maximum ON Time (sec) for single pulse[2]	∞	265	63	15
Watts (@ 20°C)	7	14	28	70
Ampere Turns (@ 20°C)	855	1200	1700	2700

Coil Data

awg (0XX)[3]	Resistance (@20°C)	# Turns[4]	VDC (Nom)	VDC (Nom)	VDC (Nom)	VDC (Nom)
24	1.10	330	2.7	3.8	5.6	8.8
25	2.13	488	3.9	5.5	7.7	12.2
26	2.90	544	4.5	6.4	9.0	14.2
27	5.27	760	6.1	8.6	12.1	19.2
28	9.15	1026	8.0	11.3	16.0	25.0
29	12.50	1146	9.4	13.2	18.7	30.0
30	20.70	1491	12.0	17.0	24.0	38.0
31	33.60	1904	15.0	22.0	31.0	48.0
32	53.50	2394	19.4	27.0	39.0	61.0
33	83.50	2970	24.0	34.0	48.0	76.0

[1] Continuously pulsed at stated watts and duty cycle
[2] Single pulse at stated watts (with coil at ambient room temperature 20°C)
[3] Other coil awg sizes available — please consult factory
[4] Reference number of turns

Specifications

Dielectric Strength	1000 VRMS
Recommended Minimum Heat Sink	Maximum watts dissipated by solenoid are based on an unrestricted flow of air at 20°C, with solenoid mounted on the equivalent of an aluminium plate measuring 76 mm square by 3.2 mm thick
Coil Resistance	±5% tolerance
Sound Level	< 50 dBA typical (Plunger end-of-travel – 17.8 mm stroke and 100% duty power – impact noise recorded with sound metre 51 mm from solenoid, suspended as a free body)
Weight	77.0 g
Plunger Weight	22.0 g

How to Order

Add the plunger number and the coil awg number to the part number (for example: to order a unit with a flat face plunger configuration without an anti-rotation flat rated for 12.1 VDC at 25% duty cycle, specify 153566-127.

Please see www.johnsonelectric.com for our list of stock products available through distribution.

All specifications subject to change without notice.

Size 75QM–STA®-Q Pull Tubular — 20 mm Dia. x 41 mm

Typical Force @ 20°C

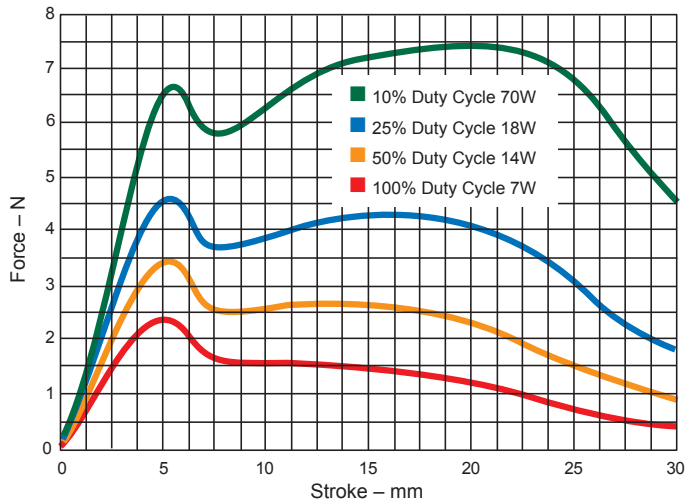

Force values for reference only.

Typical Speed @ No Load, 20°C

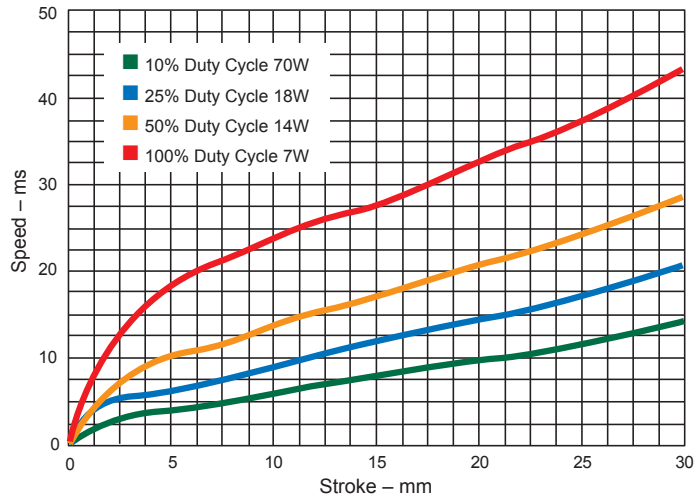

Dimensions

mm

All solenoids are illustrated in energised state

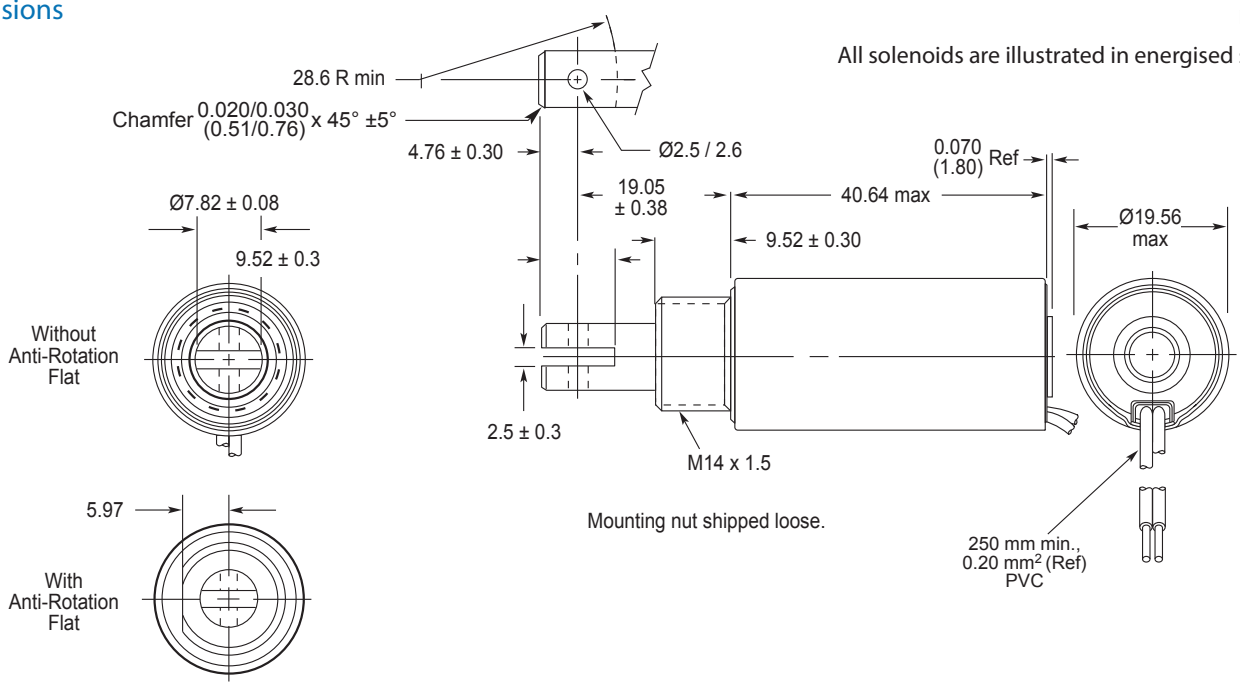

Size 75DM–STA®-D Pull Tubular — 20 mm Dia. x 41 mm

LINEAR Tubular

Part Number: 153560 - X XX

All products are RoHS Compliant

XX — Coil AWG Number (from performance chart below)

X — Plunger Configurations and anti-rotation flat on mounting
2 60° plunger without anti-rotation flat
6 60° plunger with anti-rotation flat

Performance

Maximum Duty Cycle	100%	50%	25%	10%
Maximum ON Time (sec) when pulsed continuously[1]	∞	230	25	6
Maximum ON Time (sec) for single pulse[2]	∞	265	63	15
Watts (@ 20°C)	7	14	28	70
Ampere Turns (@ 20°C)	855	1200	1700	2700

Coil Data

awg (0XX)[3]	Resistance (@20°C)	# Turns[4]	VDC (Nom)	VDC (Nom)	VDC (Nom)	VDC (Nom)
24	1.10	330	2.7	3.8	5.6	8.8
25	2.13	488	3.9	5.5	7.7	12.2
26	2.90	544	4.5	6.4	9.0	14.2
27	5.27	760	6.1	8.6	12.1	19.2
28	9.15	1026	8.0	11.3	16.0	25.0
29	12.50	1146	9.4	13.2	18.7	30.0
30	20.70	1491	12.0	17.0	24.0	38.0
31	33.60	1904	15.0	22.0	31.0	48.0
32	53.50	2394	19.4	27.0	39.0	61.0
33	83.50	2970	24.0	34.0	48.0	76.0

[1] Continuously pulsed at stated watts and duty cycle
[2] Single pulse at stated watts (with coil at ambient room temperature 20°C)
[3] Other coil awg sizes available — please consult factory
[4] Reference number of turns

Specifications

Dielectric Strength	1000 VRMS
Recommended Minimum Heat Sink	Maximum watts dissipated by solenoid are based on an unrestricted flow of air at 20°C, with solenoid mounted on the equivalent of an aluminium plate measuring 76 mm square by 3.2 mm thick
Coil Resistance	±5% tolerance
Sound Level	75 dBA typical (Plunger end-of-travel – 17.8 mm stroke and 100% duty power – impact noise recorded with sound metre 51 mm from solenoid, suspended as a free body)
Holding Force	11.7 N @ 20°C
Weight	83.6 g
Plunger Weight	20.1 g

How to Order

Add the plunger number and the coil awg number to the part number (for example: to order a unit with a 60° plunger configuration without an anti-rotation flat rated for 12.1 VDC at 25% duty cycle, specify 153560-227.

Please see www.johnsonelectric.com for our list of stock products available through distribution.

All specifications subject to change without notice.

Size 75DM–STA®-D Pull Tubular — 20 mm Dia. x 41 mm

Typical Force @ 20°C

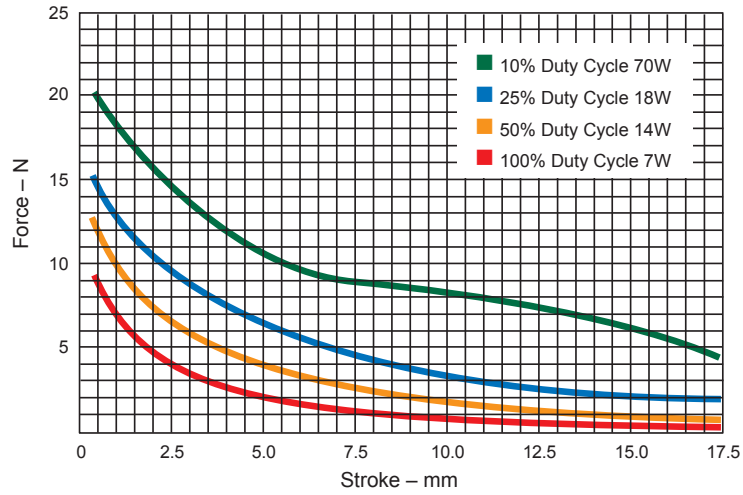

Force values for reference only.

Typical Speed @ No Load, 20°C

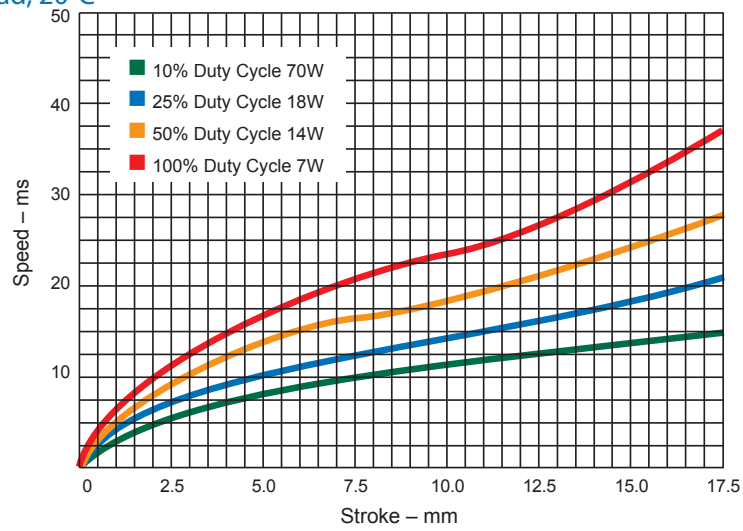

Dimensions

mm

All solenoids are illustrated in energised state

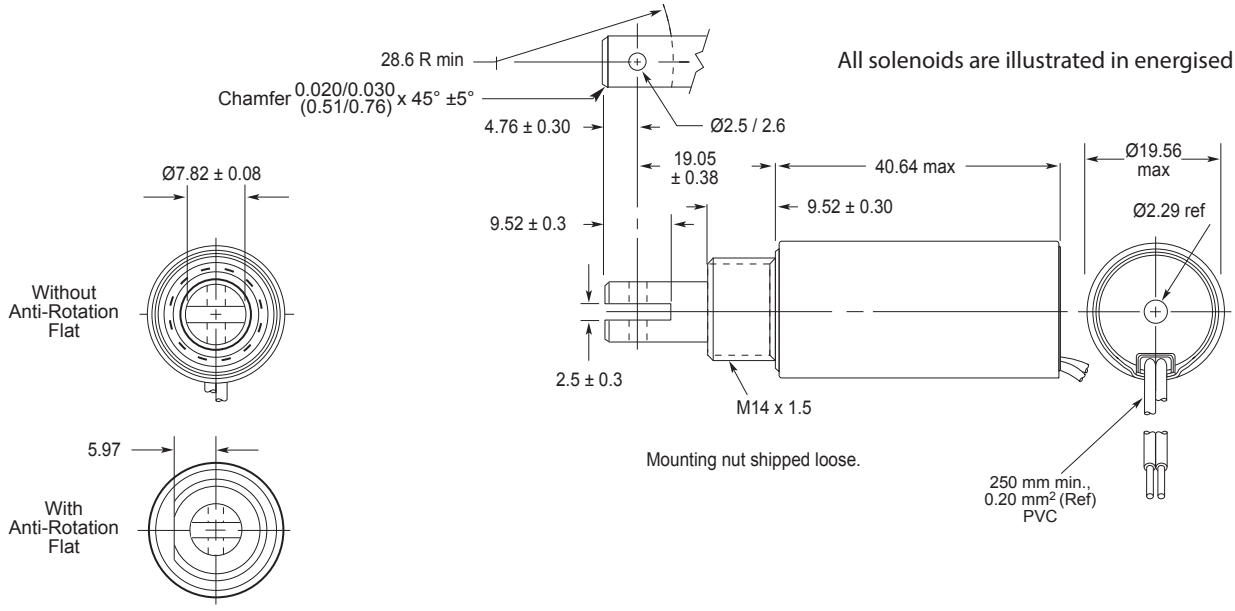

Size 75DM–STA®-D Push Tubular — 20 mm Dia. x 41 mm

LINEAR Tubular

Part Number: 153563 - X XX

All products are RoHS Compliant

Coil AWG Number
(from performance chart below)

Plunger Configurations and anti-rotation flat on mounting
2 60° plunger without anti-rotation flat
6 60° plunger with anti-rotation flat

Performance

Maximum Duty Cycle	100%	50%	25%	10%
Maximum ON Time (sec) when pulsed continuously[1]	∞	230	25	6
Maximum ON Time (sec) for single pulse[2]	∞	265	63	15
Watts (@ 20°C)	7	14	28	70
Ampere Turns (@ 20°C)	855	1200	1700	2700

Battery Powered

High Speed

Long Life

Quiet Performance

Coil Data

awg (0XX)[3]	Resistance (@20°C)	# Turns[4]	VDC (Nom)	VDC (Nom)	VDC (Nom)	VDC (Nom)
24	1.10	330	2.7	3.8	5.6	8.8
25	2.13	488	3.9	5.5	7.7	12.2
26	2.90	544	4.5	6.4	9.0	14.2
27	5.27	760	6.1	8.6	12.1	19.2
28	9.15	1026	8.0	11.3	16.0	25.0
29	12.50	1146	9.4	13.2	18.7	30.0
30	20.70	1491	12.0	17.0	24.0	38.0
31	33.60	1904	15.0	22.0	31.0	48.0
32	53.50	2394	19.4	27.0	39.0	61.0
33	83.50	2970	24.0	34.0	48.0	76.0

1 Continuously pulsed at stated watts and duty cycle
2 Single pulse at stated watts (with coil at ambient room temperature 20°C)
3 Other coil awg sizes available — please consult factory
4 Reference number of turns

Specifications

Dielectric Strength	1000 VRMS
Recommended Minimum Heat Sink	Maximum watts dissipated by solenoid are based on an unrestricted flow of air at 20°C, with solenoid mounted on the equivalent of an aluminium plate measuring 76 mm square by 3.2 mm thick
Coil Resistance	±5% tolerance
Sound Level	75 dBA typical (Plunger end-of-travel – 17.8 mm stroke and 100% duty power – impact noise recorded with sound metre 51 mm from solenoid, suspended as a free body)
Holding Force	10.9 N @ 20°C
Weight	87.3 g
Plunger Weight	15.0 g

How to Order

Add the plunger number and the coil awg number to the part number (for example: to order a unit with a 60° plunger configuration without an anti-rotation flat rated for 12.1 VDC at 25% duty cycle, specify 153563-227.

Please see www.johnsonelectric.com for our list of stock products available through distribution.

All specifications subject to change without notice.

Size 75DM–STA®-D Push Tubular — 20 mm Dia. x 41 mm

Typical Force @ 20°C

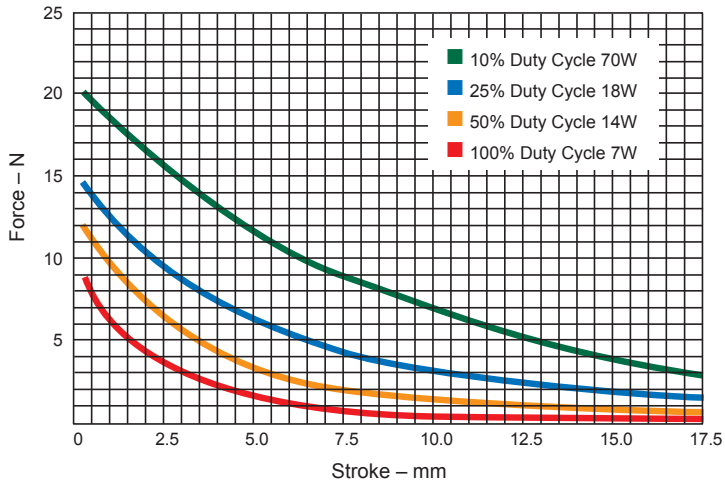

Force values for reference only.

Typical Speed @ No Load, 20°C

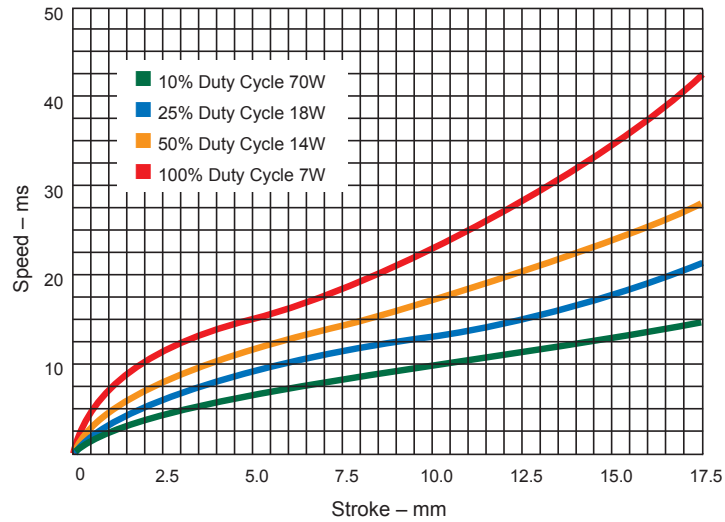

mm

Dimensions

All solenoids are illustrated in energised state

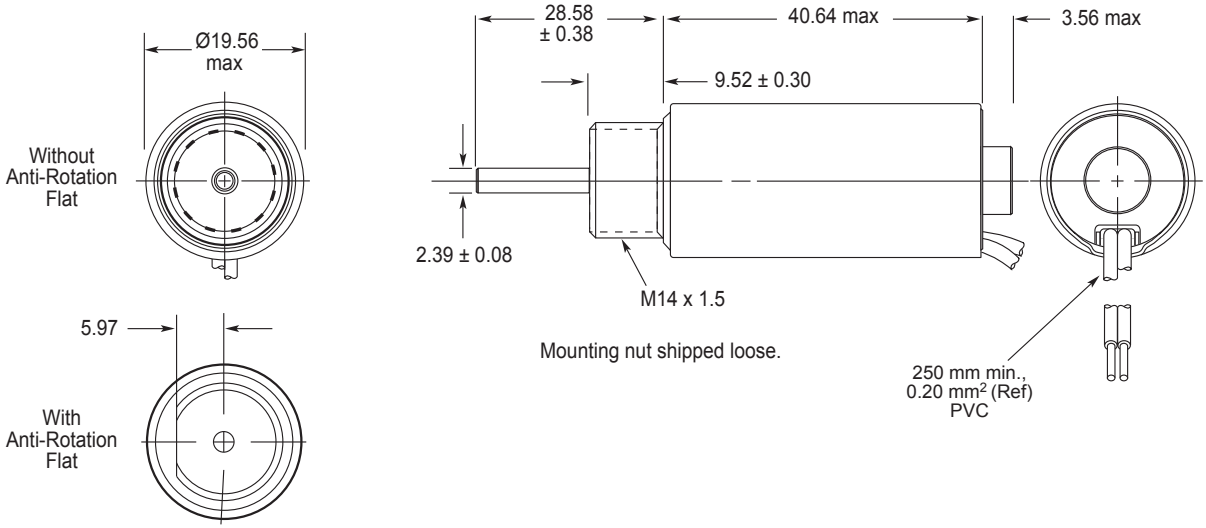

Size 102M–STA® Pull Tubular Solenoids — 26 mm Dia. x 30 mm

LINEAR Tubular

Part Number: 153099 - X XX

All products are RoHS Compliant

Coil AWG Number
(from performance chart below)

Plunger Configurations and anti-rotation flat on mounting
2 60° plunger without anti-rotation flat
6 60° plunger with anti-rotation flat

High Speed

Long Life

Performance

Maximum Duty Cycle	100%	50%	25%	10%
Maximum ON Time (sec) when pulsed continuously[1]	∞	104	24	8
Maximum ON Time (sec) for single pulse[2]	∞	187	55	18
Watts (@ 20°C)	8	16	32	80
Ampere Turns (@ 20°C)	718	1015	1435	2270

Coil Data

awg (0XX)[3]	Resistance (@20°C)	# Turns[4]	VDC (Nom)	VDC (Nom)	VDC (Nom)	VDC (Nom)
23	0.88	240	2.7	3.8	5.3	8.4
24	1.23	272	3.1	4.4	6.3	9.9
25	2.23	380	4.2	6.0	8.4	13.3
26	3.85	510	5.6	7.8	11.1	17.6
27	5.32	576	6.5	9.2	13.0	20.6
28	8.83	749	8.4	11.9	16.8	26.6
29	14.35	960	10.7	15.1	21.4	33.8
30	22.78	1206	13.5	19.1	27.0	42.7
31	35.69	1500	16.9	23.9	33.8	53.4
32	54.90	1837	21.0	29.7	42.0	66.4
33	93.08	2431	27.3	38.6	54.6	86.3

[1] Continuously pulsed at stated watts and duty cycle
[2] Single pulse at stated watts (with coil at ambient room temperature 20°C)
[3] Other coil awg sizes available — please consult factory
[4] Reference number of turns

Specifications

Dielectric Strength	1000 VRMS
Recommended Minimum Heat Sink	Maximum watts dissipated by solenoid are based on an unrestricted flow of air at 20°C, with solenoid mounted on the equivalent of an aluminum plate measuring 102 mm square by 3.2 mm thick
Coil Resistance	±5% tolerance
Holding Force	21.8 N at 20°C
Weight	110 g
Plunger Weight	28 g

How to Order

Add the plunger configuration and the coil awg number to the part number (for example: to order a unit with a 60° plunger configuration without an anti-rotation flat rated for 5.3 VDC at 25% duty cycle, specify 153099-223.

Please see www.johnsonelectric.com for our list of stock products available through distribution.

All specifications subject to change without notice.

Size 102M–STA® Pull Tubular Solenoids — 26 mm Dia. x 30 mm

Typical Force @ 20°C

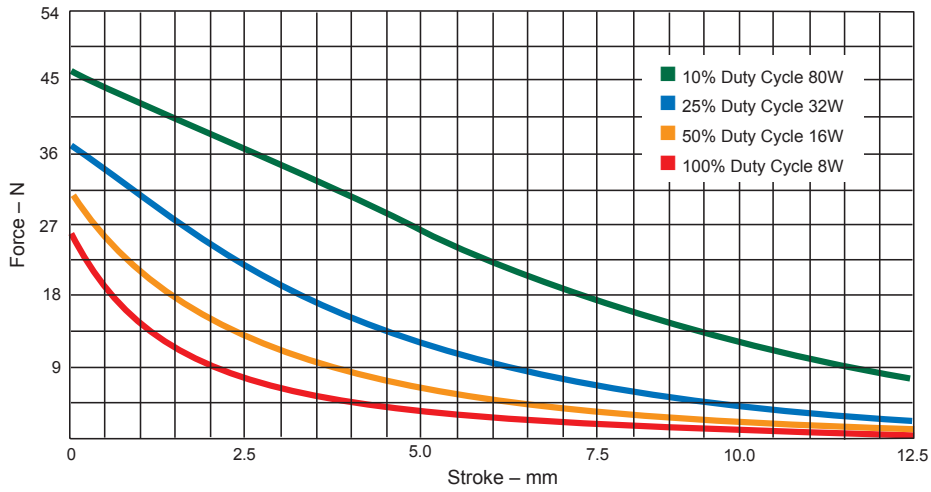

Force values for reference only.

Dimensions

mm

All solenoids are illustrated in energised state

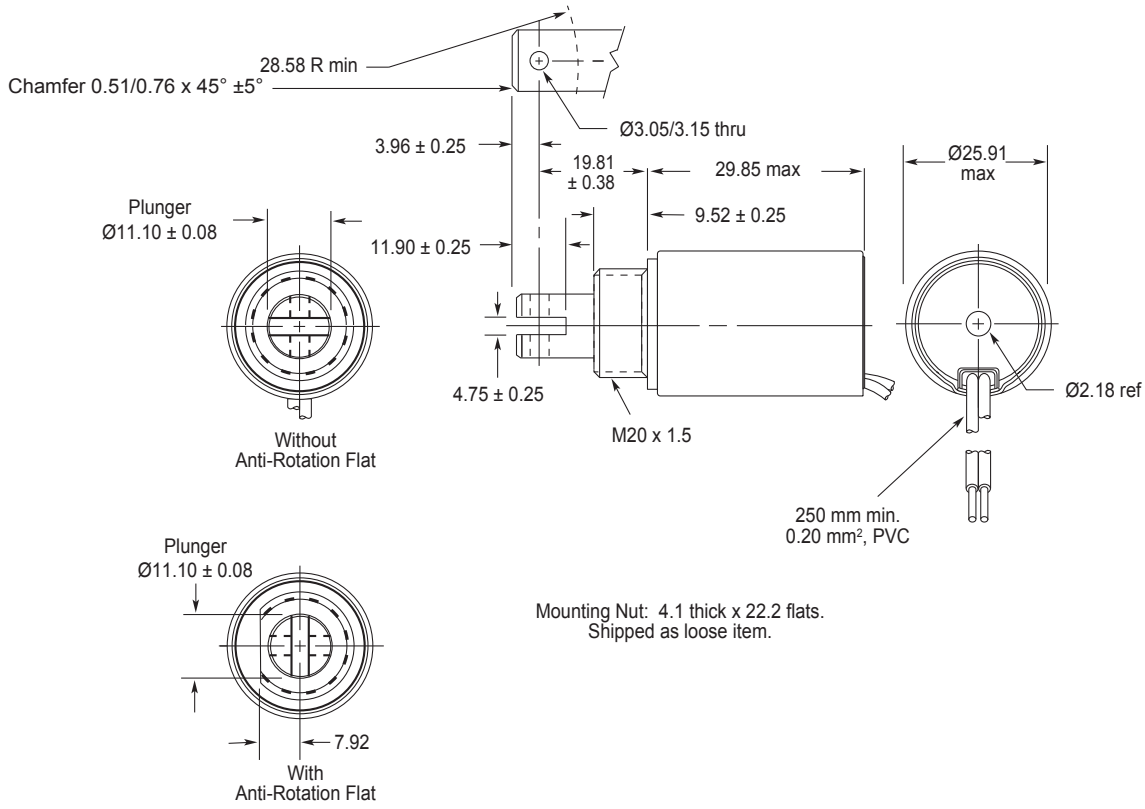

Size 102M–STA® Push Tubular Solenoids — 26 mm Dia. x 30 mm

LINEAR Tubular

Part Number: 154770 - X XX

All products are RoHS Compliant

XX — Coil AWG Number (from performance chart below)

X — Plunger Configurations and anti-rotation flat on mounting
2 60° plunger without anti-rotation flat
6 60° plunger with anti-rotation flat

High Speed

Long Life

Performance

Maximum Duty Cycle	100%	50%	25%	10%
Maximum ON Time (sec) when pulsed continuously[1]	∞	104	24	8
Maximum ON Time (sec) for single pulse[2]	∞	187	55	18
Watts (@ 20°C)	8	16	32	80
Ampere Turns (@ 20°C)	718	1015	1435	2270

Coil Data

awg (0XX)[3]	Resistance (@20°C)	# Turns[4]	VDC (Nom)	VDC (Nom)	VDC (Nom)	VDC (Nom)
23	0.88	240	2.7	3.8	5.3	8.4
24	1.23	272	3.1	4.4	6.3	9.9
25	2.23	380	4.2	6.0	8.4	13.3
26	3.85	510	5.6	7.8	11.1	17.6
27	5.32	576	6.5	9.2	13.0	20.6
28	8.83	749	8.4	11.9	16.8	26.6
29	14.35	960	10.7	15.1	21.4	33.8
30	22.78	1206	13.5	19.1	27.0	42.7
31	35.69	1500	16.9	23.9	33.8	53.4
32	54.90	1837	21.0	29.7	42.0	66.4
33	93.08	2431	27.3	38.6	54.6	86.3

[1] Continuously pulsed at stated watts and duty cycle
[2] Single pulse at stated watts (with coil at ambient room temperature 20°C)
[3] Other coil awg sizes available — please consult factory
[4] Reference number of turns

Specifications

Dielectric Strength	1000 VRMS
Recommended Minimum Heat Sink	Maximum watts dissipated by solenoid are based on an unrestricted flow of air at 20°C, with solenoid mounted on the equivalent of an aluminum plate measuring 102 mm square by 3.2 mm thick
Coil Resistance	±5% tolerance
Holding Force	15.1 N at 20°C
Weight	110 g
Plunger Weight	18.4 g

How to Order

Add the plunger configuration and the coil awg number to the part number (for example: to order a unit with a 60° plunger configuration without an anti-rotation flat rated for 5.3 VDC at 25% duty cycle, specify 154770-223.

Please see www.johnsonelectric.com for our list of stock products available through distribution.

All specifications subject to change without notice.

Size 102M–STA® Push Tubular Solenoids — 26 mm Dia. x 30 mm

Typical Force @ 20°C

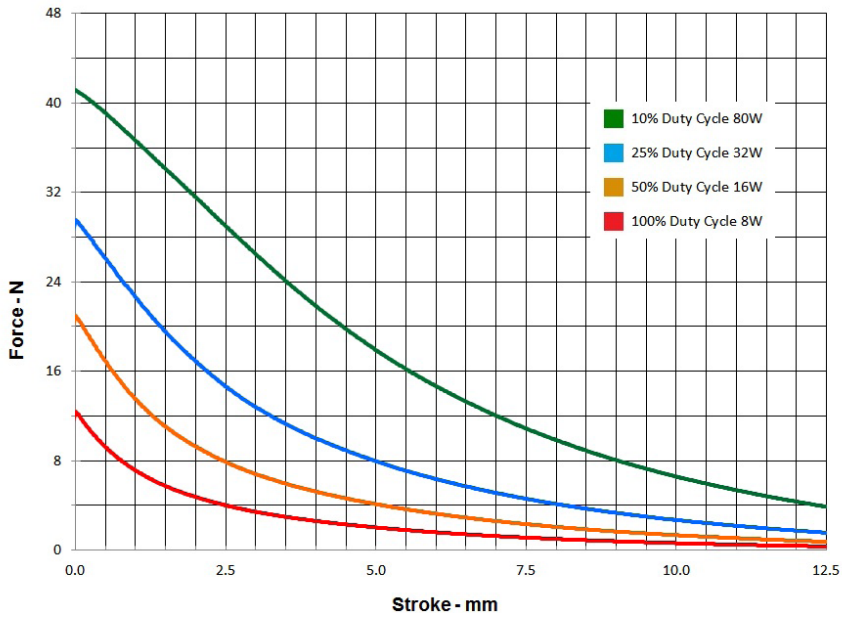

Force values for reference only.

Dimensions

mm

All solenoids are illustrated in energised state

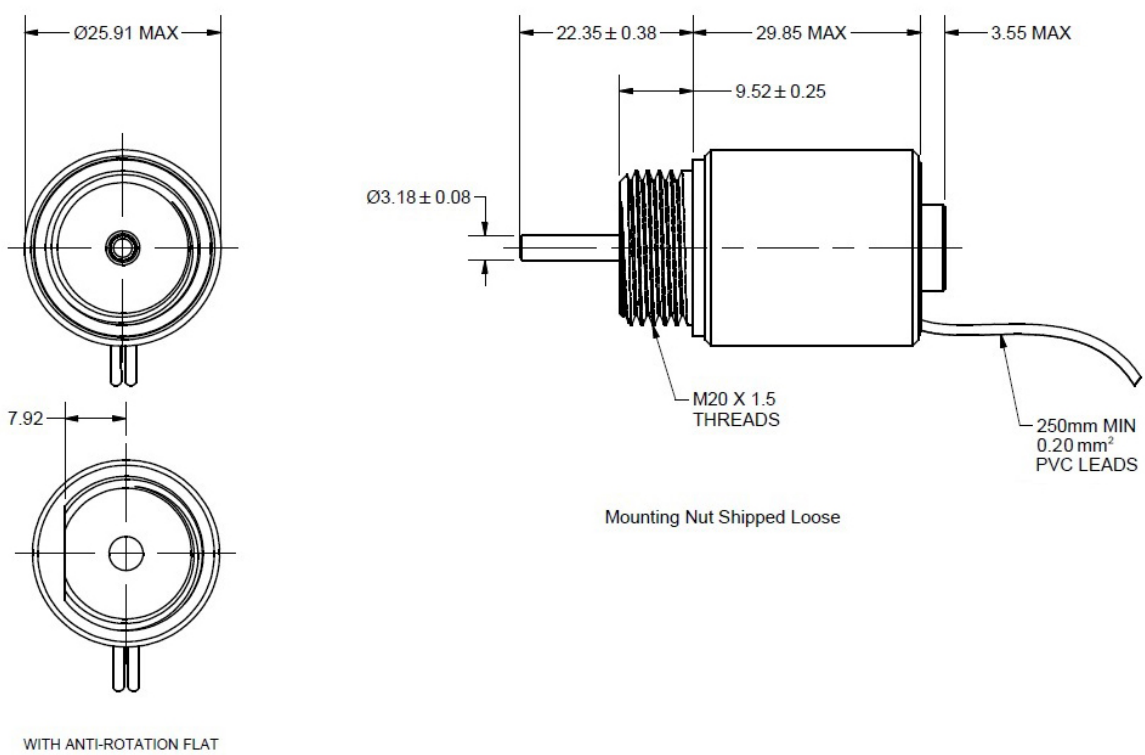

Size 100M–STA® Pull Tubular Solenoids — 26 mm Dia. x 52 mm

LINEAR Tubular

Part Number: 195226 - X XX

All products are RoHS Compliant

Coil AWG Number
(from performance chart below)

Plunger Configurations and anti-rotation flat on mounting
1 Flat face plunger without anti-rotation flat
2 60° plunger without anti-rotation flat
5 Flat face plunger with anti-rotation flat
6 60° plunger with anti-rotation flat

High Speed

Long Life

Performance

Maximum Duty Cycle	100%	50%	25%	10%
Maximum ON Time (sec) when pulsed continuously[1]	∞	360	32	8
Maximum ON Time (sec) for single pulse[2]	∞	470	120	32
Watts (@ 20°C)	10	20	40	100
Ampere Turns (@ 20°C)	1166	1649	2332	3688

Coil Data

awg (0XX)[3]	Resistance (@20°C)	# Turns[4]	VDC (Nom)	VDC (Nom)	VDC (Nom)	VDC (Nom)
23	1.96	536	4.4	6.3	8.9	14.0
24	2.69	600	5.2	7.3	10.4	16.4
25	4.89	840	7.0	9.9	14.0	22.0
26	8.70	1117	9.4	13.3	18.8	29.7
27	11.50	1260	10.7	15.2	21.0	34.0
28	19.20	1645	13.8	19.6	28.0	44.0
29	31.20	2104	17.7	25.0	35.0	56.0
30	49.60	2646	22.0	31.0	45.0	70.0
31	77.40	3280	28.0	39.0	56.0	88.0
32	119.00	4026	35.0	49.0	69.0	109.0
33	202.00	5317	45.0	64.0	90.0	142.0

[1] Continuously pulsed at stated watts and duty cycle
[2] Single pulse at stated watts (with coil at ambient room temperature 20°C)
[3] Other coil awg sizes available — please consult factory
[4] Reference number of turns

Specifications

Dielectric Strength	1000 VRMS
Recommended Minimum Heat Sink	Maximum watts dissipated by solenoid are based on an unrestricted flow of air at 20°C, with solenoid mounted on the equivalent of an aluminium plate measuring 102 mm square by 3.2 mm thick
Coil Resistance	±5% tolerance
Holding Force	Flat Face: 61.5 N @ 20°C 60°: 29.4 N @ 20°C
Weight	197.3 g
Plunger Weight	45.4 g

How to Order

Add the plunger configuration number and the coil awg number to the part number (for example: to order a unit with a 60° plunger rated for 21 VDC at 25% duty cycle, specify 195226-227.

Please see www.johnsonelectric.com for our list of stock products available through distribution.

All specifications subject to change without notice.

Size 100M–STA® Pull Tubular Solenoids — 26 mm Dia. x 52 mm

Flat Face Plunger

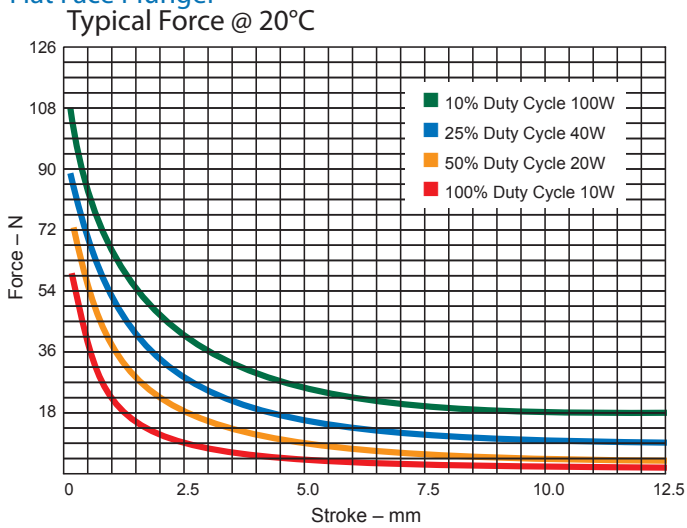

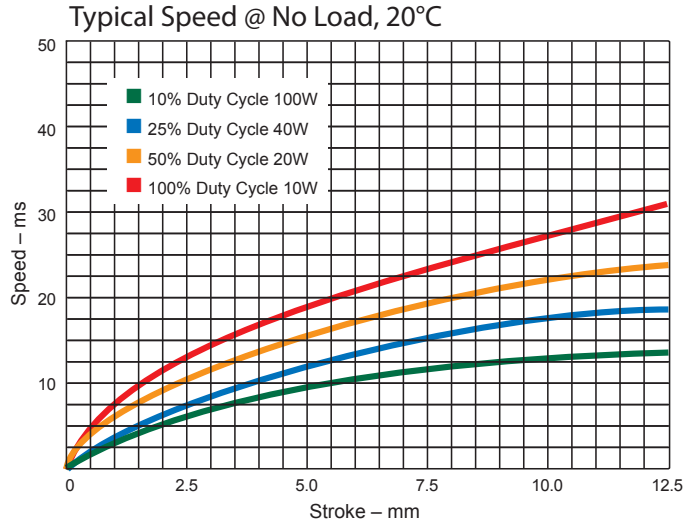

60° Plunger

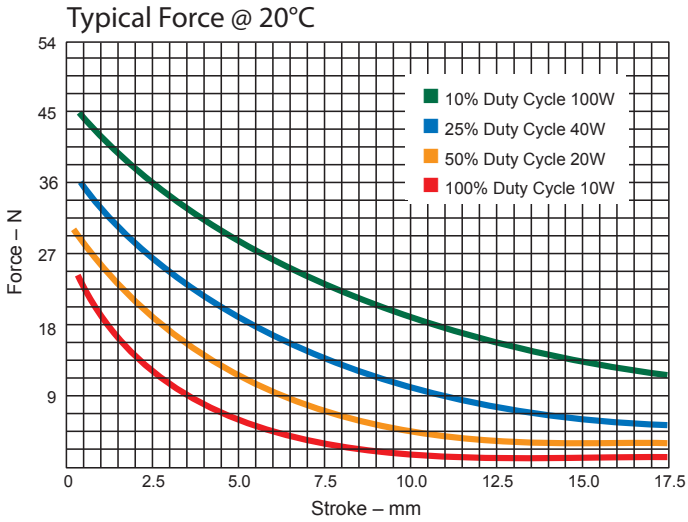

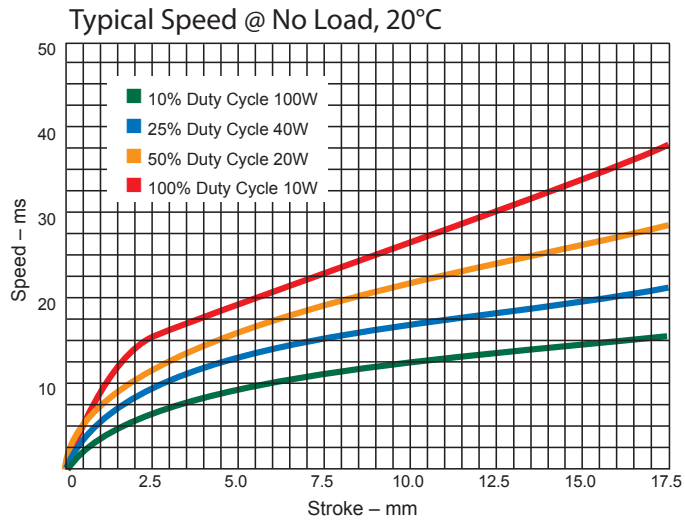

Force values for reference only.

Dimensions

mm

All solenoids are illustrated in energised state

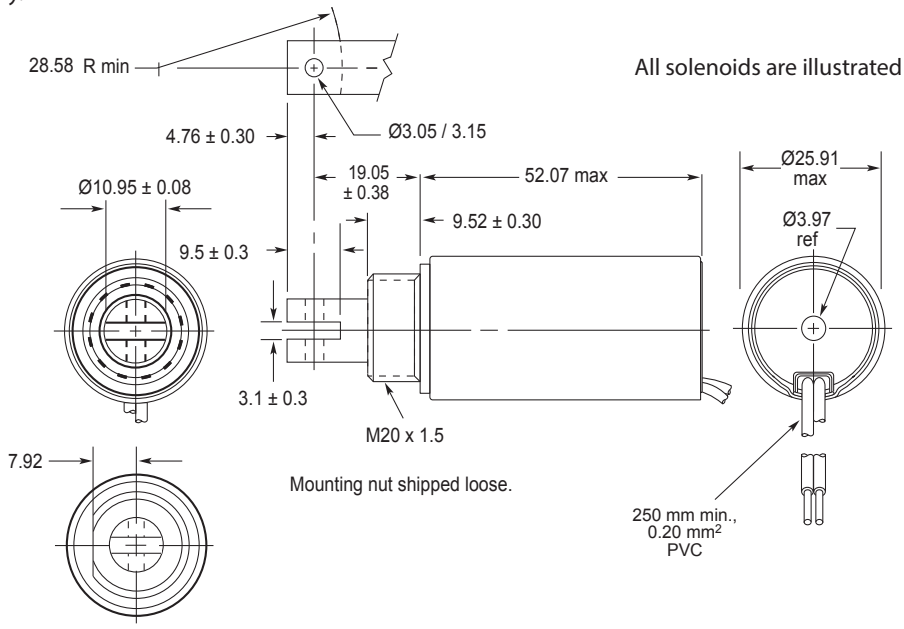

Size 100M–STA® Push Tubular Solenoids — 26 mm Dia. x 52 mm

LINEAR Tubular

Part Number: 195227 - X XX

All products are RoHS Compliant

XX — Coil AWG Number (from performance chart below)

X — Plunger Configurations and anti-rotation flat on mounting
- 1 Flat face plunger without anti-rotation flat
- 2 60° plunger without anti-rotation flat
- 5 Flat face plunger with anti-rotation flat
- 6 60° plunger with anti-rotation flat

Performance

High Speed

Long Life

Maximum Duty Cycle	100%	50%	25%	10%
Maximum ON Time (sec) when pulsed continuously[1]	∞	360	32	8
Maximum ON Time (sec) for single pulse[2]	∞	470	120	32
Watts (@ 20°C)	10	20	40	100
Ampere Turns (@ 20°C)	1166	1649	2332	3688

Coil Data

awg (0XX)[3]	Resistance (@20°C)	# Turns[4]	VDC (Nom)	VDC (Nom)	VDC (Nom)	VDC (Nom)
23	1.96	536	4.4	6.3	8.9	14.0
24	2.69	600	5.2	7.3	10.4	16.4
25	4.89	840	7.0	9.9	14.0	22.0
26	8.70	1117	9.4	13.3	18.8	29.7
27	11.50	1260	10.7	15.2	21.0	34.0
28	19.20	1645	13.8	19.6	28.0	44.0
29	31.20	2104	17.7	25.0	35.0	56.0
30	49.60	2646	22.0	31.0	45.0	70.0
31	77.40	3280	28.0	39.0	56.0	88.0
32	119.00	4026	35.0	49.0	69.0	109.0
33	202.00	5317	45.0	64.0	90.0	142.0

[1] Continuously pulsed at stated watts and duty cycle

[2] Single pulse at stated watts (with coil at ambient room temperature 20°C)

[3] Other coil awg sizes available — please consult factory

[4] Reference number of turns

Specifications

Dielectric Strength	1000 VRMS
Recommended Minimum Heat Sink	Maximum watts dissipated by solenoid are based on an unrestricted flow of air at 20°C, with solenoid mounted on the equivalent of an aluminium plate measuring 102 mm square by 3.2 mm thick
Coil Resistance	±5% tolerance
Holding Force	Flat Face: 52.6 N @ 20°C 60°: 28.9 N @ 20°C
Weight	190.8 g
Plunger Weight	33.7 g

How to Order

Add the plunger configuration number and the coil awg number to the part number (for example: to order a unit with a 60° plunger rated for 21 VDC at 25% duty cycle, specify 195227-227.

Please see www.johnsonelectric.com for our list of stock products available through distribution.

All specifications subject to change without notice.

Size 100M–STA® Push Tubular Solenoids — 26 mm Dia. x 52 mm

Flat Face Plunger

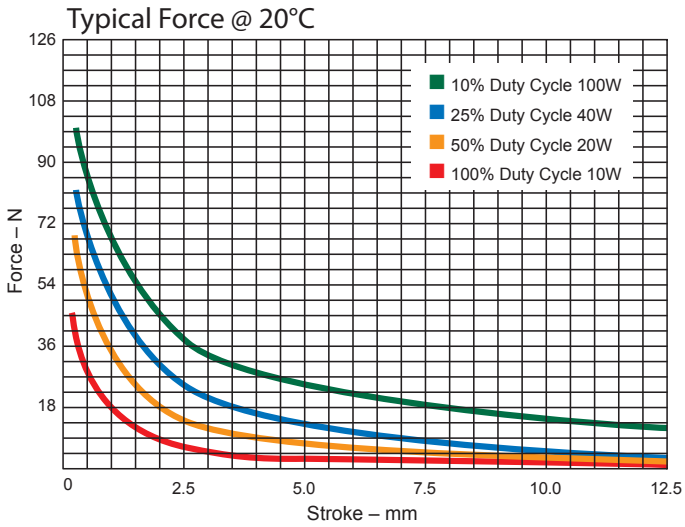

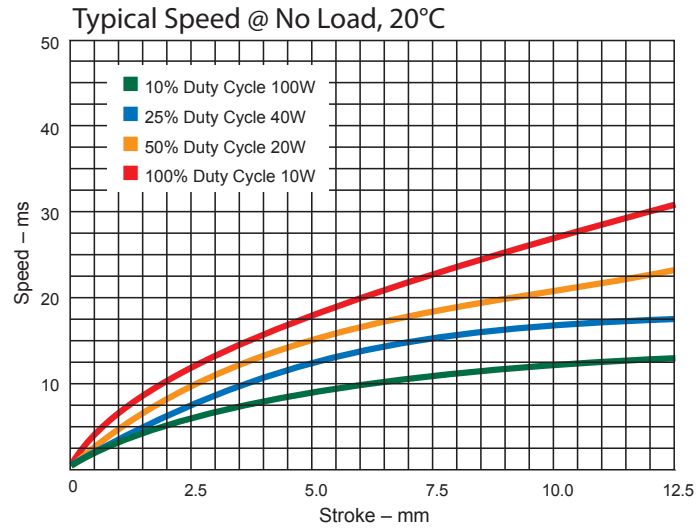

60° Plunger

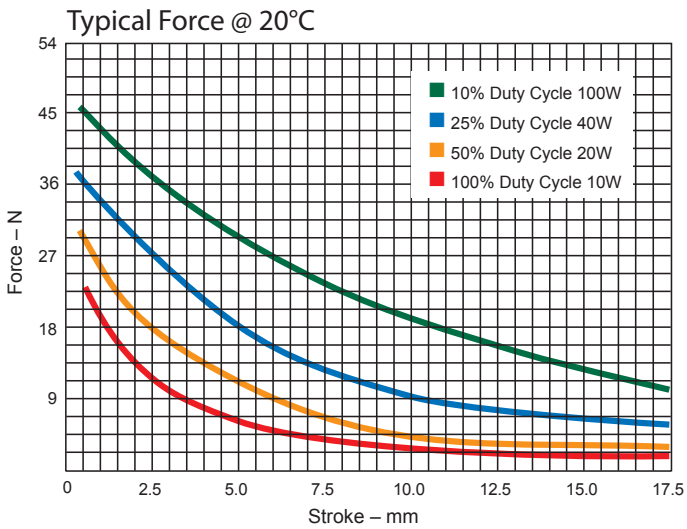

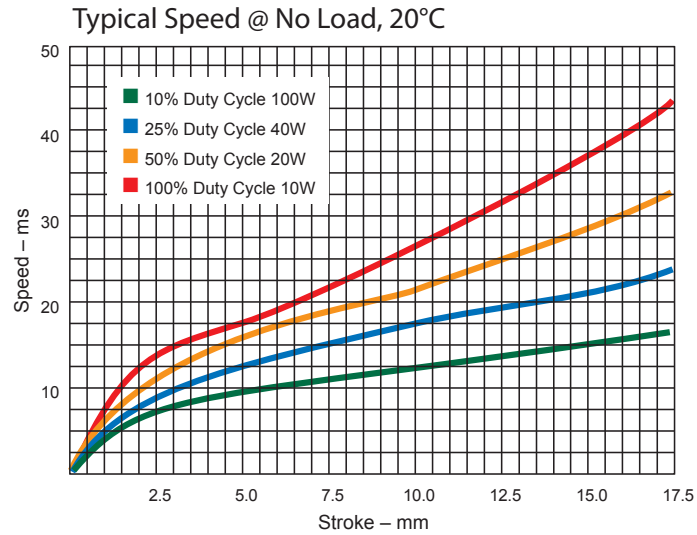

Force values for reference only.

Dimensions

mm

All solenoids are illustrated in energised state

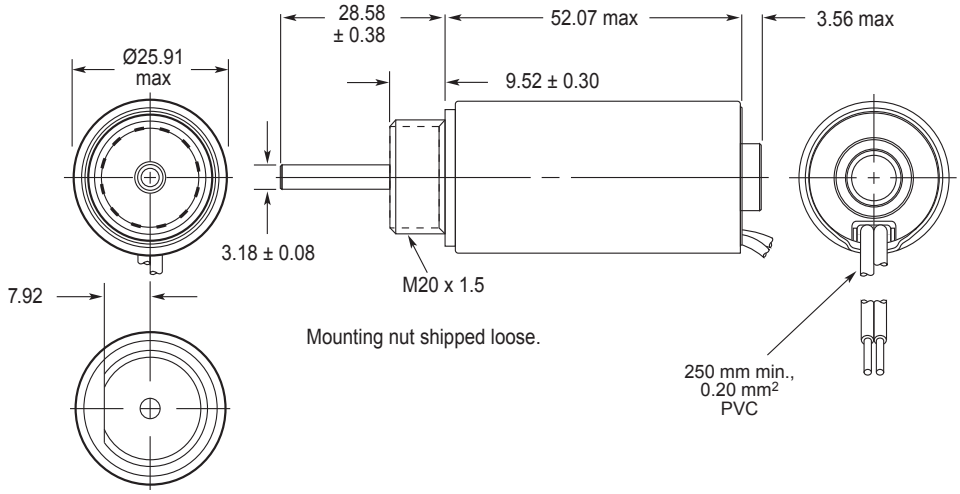

Ledex® Size 125M Pull Tubular Solenoids — 32 mm Dia. x 57 mm

LINEAR Tubular

Part Number: 282366-0XX

Coil AWG Number
(from performance chart below)

All products are RoHS Compliant

Performance

Maximum Duty Cycle	100%	50%	25%	10%
Maximum ON Time (sec) when pulsed continuously[1]	∞	390	60	18
Maximum ON Time (sec) for single pulse[2]	∞	510	160	45
Watts (@ 20°C)	13	26	52	130
Ampere Turns (@ 20°C)	1500	2121	3000	4743

Coil Data						
awg (0XX)[3]	Resistance (@20°C)	# Turns[4]	VDC (Nom)	VDC (Nom)	VDC (Nom)	VDC (Nom)
23	3.52	780	6.8	9.6	13.6	22.0
24	6.04	1056	8.6	12.2	17.2	27.0
25	8.47	1176	10.9	15.4	22.0	34.0
26	14.10	1540	13.8	19.5	28.0	44.0
27	22.50	1970	17.3	24.0	35.0	55.0
28	36.10	2484	22.0	31.0	44.0	69.0
29	55.10	3060	27.0	38.0	54.0	86.0
30	88.10	3805	35.0	49.0	70.0	110.0
31	147.00	5044	44.0	62.0	88.0	139.0
32	214.00	5992	54.0	76.0	107.0	170.0
33	354.00	7744	69.0	98.0	138.0	218.0

[1] Continuously pulsed at stated watts and duty cycle

[2] Single pulse at stated watts (with coil at ambient room temperature 20°C)

[3] Other coil awg sizes available — please consult factory

[4] Reference number of turns

Specifications

Dielectric Strength	1000 VRMS
Recommended Minimum Heat Sink	Maximum watts dissipated by solenoid are based on an unrestricted flow of air at 20°C, with solenoid mounted on the equivalent of an aluminium plate measuring 127 mm square by 3.2 mm thick
Coil Resistance	±5% tolerance
Holding Force	40.0 N @ 20°C
Weight	295 g
Plunger Weight	53.2 g

How to Order

Add the coil awg number (0XX) to the part number (for example: to order a 25% duty cycle unit rated at 35 VDC, specify 282366-027).

Please see www.johnsonelectric.com for our list of stock products available through distribution.

All specifications subject to change without notice.

Ledex® Size 125M Pull Tubular Solenoids — 32 mm Dia. x 57 mm

Typical Force @ 20°C

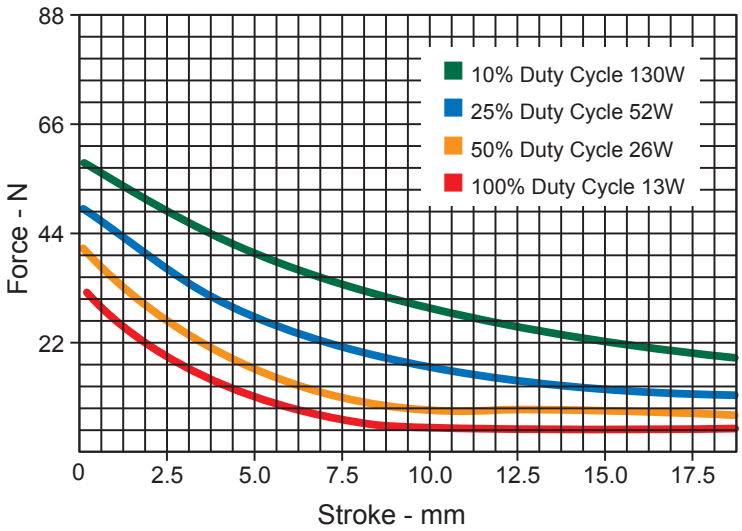

Typical Speed @ No Load, 20°C

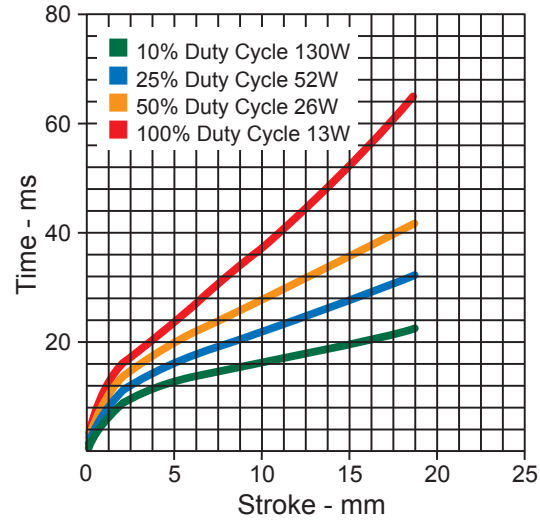

Force values for reference only.

Dimensions

mm

All solenoids are illustrated in energised state

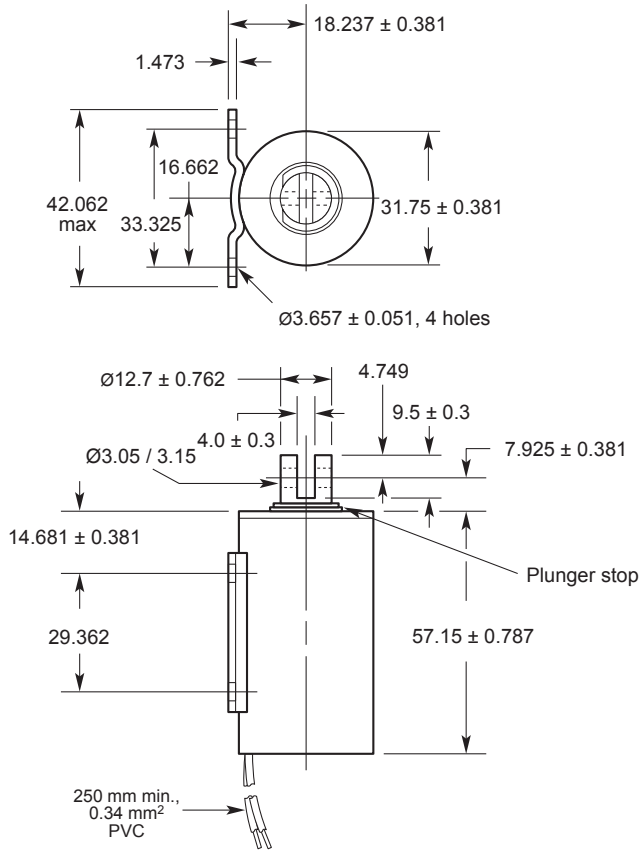

Ledex® Size 150M Pull Tubular Solenoids — 38 mm Dia. x 64 mm

LINEAR Tubular

Part Number: 282367-0XX

Coil AWG Number
(from performance chart below)

All products are RoHS Compliant

Performance

Maximum Duty Cycle	100%	50%	25%	10%
Maximum ON Time (sec) when pulsed continuously[1]	∞	420	100	25
Maximum ON Time (sec) for single pulse[2]	∞	570	252	75
Watts (@ 20°C)	17	34	68	170
Ampere Turns (@ 20°C)	1800	2546	3600	5692

Coil Data						
awg (0XX)[3]	Resistance (@20°C)	# Turns[4]	VDC (Nom)	VDC (Nom)	VDC (Nom)	VDC (Nom)
23	5.58	1030	9.8	13.9	19.7	31.0
24	9.30	1344	12.4	17.6	25.0	39.0
25	14.90	1712	15.7	22.0	31.0	50.0
26	24.00	2180	19.9	28.0	40.0	63.0
27	36.90	2680	25.0	35.0	50.0	79.0
28	58.40	3322	32.0	45.0	63.0	100.0
29	87.50	4008	39.0	56.0	79.0	124.0
30	148.00	5292	50.0	71.0	101.0	159.0
31	224.00	6360	63.0	90.0	127.0	200.0
32	344.00	7956	78.0	110.0	155.0	246.0
33	554.00	10070	100.0	141.0	199.0	315.0

[1] Continuously pulsed at stated watts and duty cycle

[2] Single pulse at stated watts (with coil at ambient room temperature 20°C)

[3] Other coil awg sizes available — please consult factory

[4] Reference number of turns

Specifications

Dielectric Strength	1000 VRMS
Recommended Minimum Heat Sink	Maximum watts dissipated by solenoid are based on an unrestricted flow of air at 20°C, with solenoid mounted on the equivalent of an aluminium plate measuring 152 mm square by 3.2 mm thick
Coil Resistance	±5% tolerance
Holding Force	64.5 N at 20°C
Weight	481.8 g
Plunger Weight	95.0 g

How to Order

Add the coil awg number (0XX) to the part number (for example: to order a 25% duty cycle unit rated at 50 VDC, specify 282367-027).

Please see www.johnsonelectric.com for our list of stock products available through distribution.

All specifications subject to change without notice.

Ledex® Size 150M Pull Tubular Solenoids — 38 mm Dia. x 64 mm

Typical Force @ 20°C

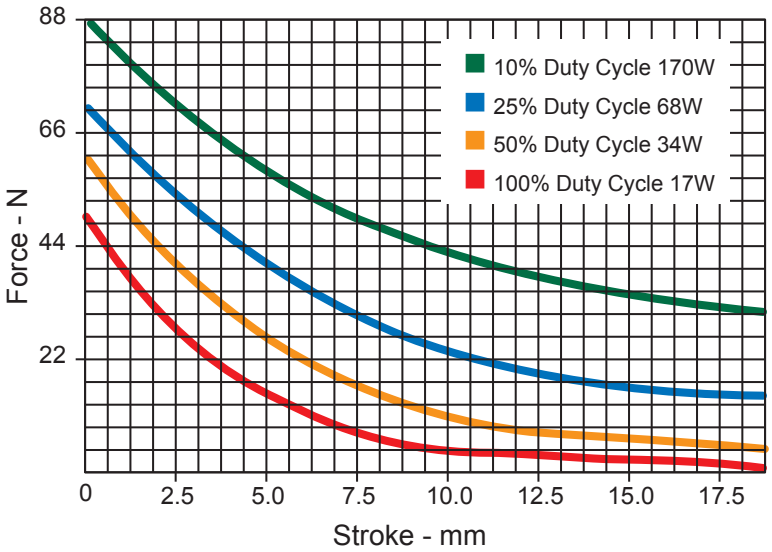

Force values for reference only.

Typical Speed @ No Load, 20°C

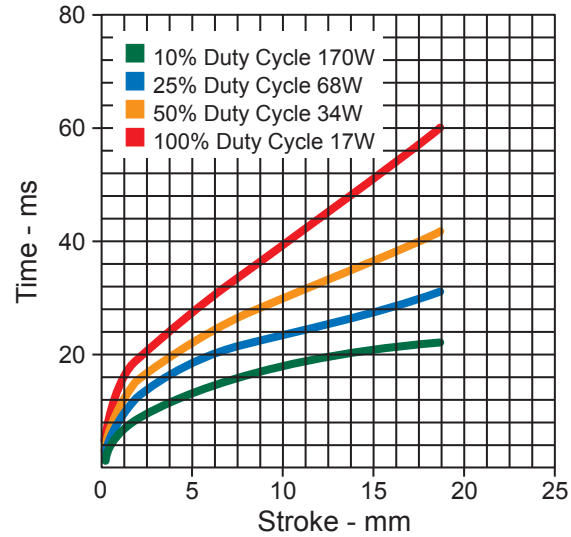

Dimensions

mm
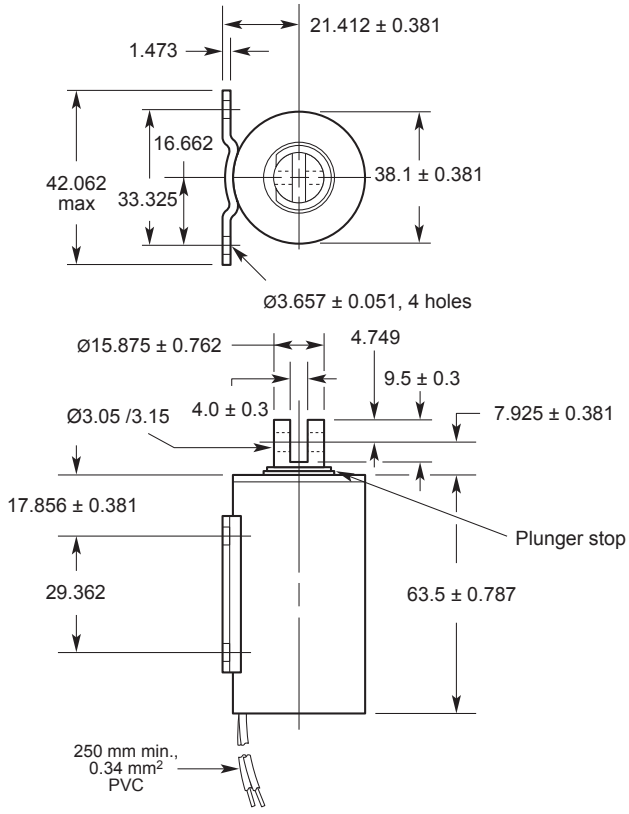
All solenoids are illustrated in energised state